Automation for a Changing World

Delta Integrated Elevator Drive IED Series

www.deltaww.com

Smarter. Greener. Together.

Delta Integrated Elevator Drive IED Series

Delta Electronics, a leading brand in industrial automation, introduces integrated elevator devices with newly developed technology. Delta's IED series meets international safety standards (UL/CE) and integrates host controller and drive to vastly improve the operation performance and reliability of the elevator. The single MCU design of the IED series is space saving and suitable for various applications in different markets for passenger and freight elevators. It is designed with provisions for full technical and maintenance support and offers one-stop shopping for all you need in an elevator drive. The planning, assembly, technology and additional services are all included within the Delta IED series. Delta as your most reliable partner presents this specialized solution for ultimate performance.

IED

I = Integration
Independent
Indispensable

E = Easy to Use
Economical
Environment friendly

D = Design
Drive
Deliver

Integration that meets the highest standards of the elevator industry

I

I = Integrated

- Integrates host controller and drive functions
- A single MCU provides for all operation needs

I = Independent

- Flexible applications with various types of auto-tuning for synchronous and asynchronous motors, also applicable to various encoders
- Unlimited applications, from low speed to high speed elevators, freight elevators and passenger elevators

I = Indispensable

- Provides for all your needs from key components to total system solutions
- Global sales locations provide rapid service

E

E = Easy to Use

- Simple parameter settings
- Intelligent on-site auto-tuning

E = Economic

- On-site tuning with load
- Accurate direct-stop and automatically generates speed curve of car traveling

E = Environment friendly

- With selective power generation unit to create a more eco-friendly solution
- Compliant with UL and CE standards

D

D = Design

- Innovative design for hardware protection, ensuring safe elevator operation
- Modular design for easy installation and maintenance

D = Drive

- Professional motor and drive control technology
- Smooth elevator motion, perfect stop and start

D = Deliver

- Provides true integration, flexible and indispensable elevator solutions
- Delta's IED delivers for you

IED Features

Auto-tuning with load

- Ability to perform auto-tuning with loads when elevator structure is completed. (Saves you the hassle of re-assembling the elevator structure)
- Supports varied types of encoders when elevator is with loads
- Precisely measures the motor parameters with loads present
- Precisely measures the PG offset angle with loads present
- Simple and easy tuning for construction site applications. No need to add loads for balancing
- Safe, reliable, and labor-saving

Smooth start and stop without load compensation

- Easy adjustment with simple testing process
- Applicable to any elevator structure, provides precise control, consistent efficiency and not affected at all by external conditions
- Auto-adjustment of starting torque to provide a smooth and comfortable ride

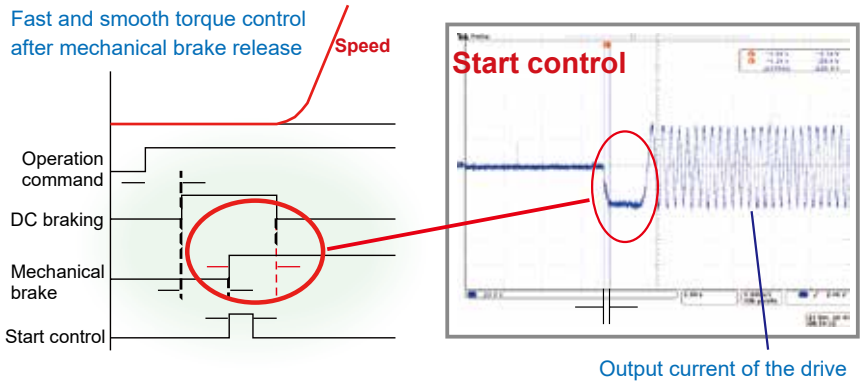

Compact design of control cabinet to strengthen the structure

- Thin body design with a minimum thickness of 146mm

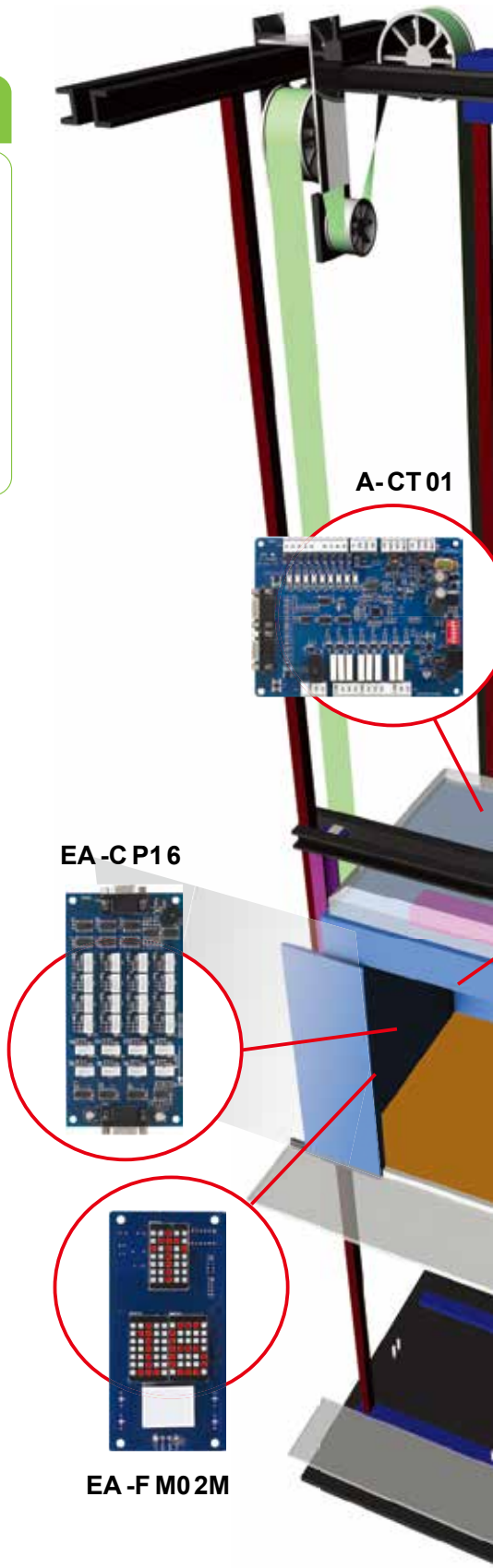

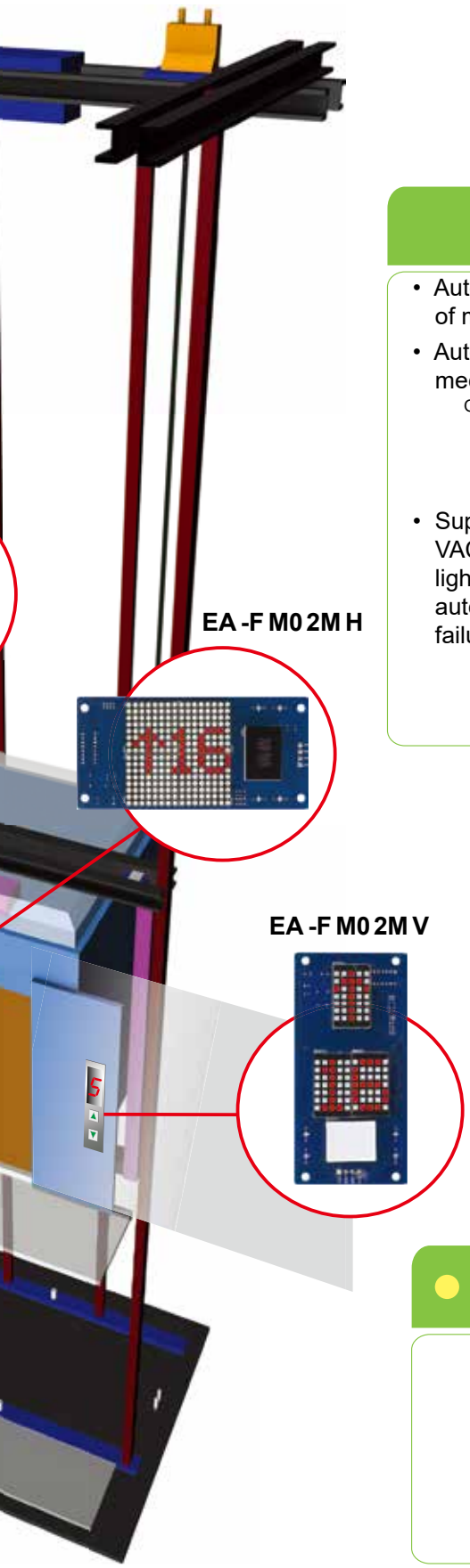

Reliable ride with comfort and safety ensured

- Auto-detection on output phase loss to ensure proper operation of motor
- Automatic confirmation on torque output before releasing the mechanical brake

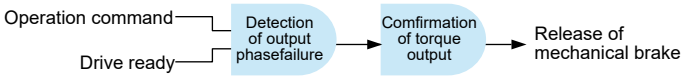

Dual protection, elevator safety guaranteed

- Supports single-phase 230 VAC UPS and executes a light-load direction search automatically when power failure occurs

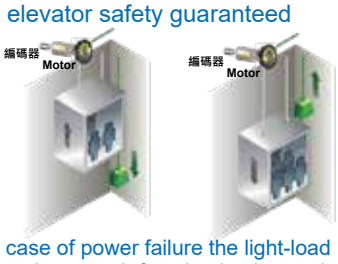

In case of power failure the light-load direction search function is triggered to bring the elevator car to the nearest floor instantly.

Built-in digital keypad with easy-to-use features

- Optional LCD (KPC-CC01), a pull-out type digital keypad supporting multi-languages is available upon purchase

USB port convenient for program upload/ download and facilitating the tuning process

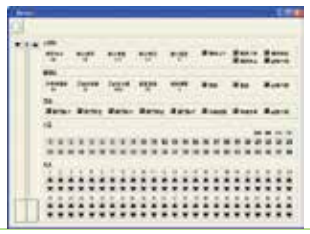

Applications Fields and Speed:

- Passenger elevators, medical elevators, elevators for disabled, housing and commercial buildings
- Low speed, mid speed and high speed elevators
- Elevator speed: 4m/sec

A fully integrated drive technology in one MCU

- Direct stop
- Faster speed, all digital signals are processed simultaneously
- A single operational MCU lowers the malfunction rate
- Integrates a host controller and a drive into one MCU

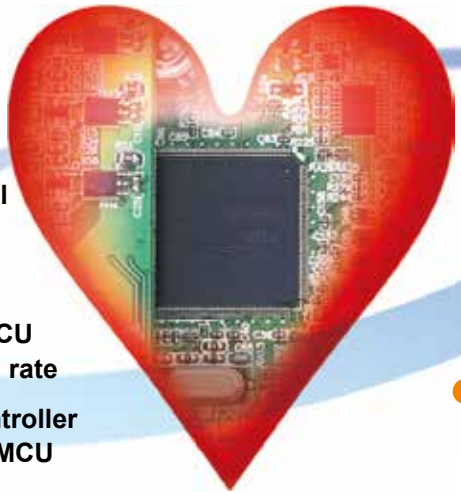

- One MCU for all configurations, no communication or configuration delays.
- One MCU design has no need to transmit data to others and no interference problem
- Compact, space-saving

One MCU	Two MCUs
Fast calculation for Direct Stop	Slow calculation for Direct Stop
Faster speed, all digital signals are processed simultaneously	Slower speeds, digital signals are processed separately
A single operational MCU lowers the malfunction rate	Two MCUs processing simultaneously increase the malfunction rate
One MCU does all configurations, no communication or configuration delays	Two MCUs compute separately and interact through mutual communication causing delays in computing time
One MCU does all configurations, no communication or interference problems	Two MCUs compute separately and transfer data to each other, causing errors due to interference
Compact, space-saving	Two MCUs are space consuming
Integrates host controller and drive into one MCU	One MCU for host controller and one MCU for drive

IED Features

- **Operator inspection mode:**
  When the elevator is undergoing maintenance or inspection, this mode allows an operator to conduct a low speed run via the maintenance switches located on the top of the car, inside the car or on the control board.

- **Direct stop:**
  With floor distances and parameters settings provided to the system, this feature calculates and configures the optimal speed curve automatically for the elevator to operate from start to stop.

- **Real-time speed curve configuration:**
  The elevator's speed curve is configured in real-time to operate between floors with different travel distances.

- **Default door opening:**
  The elevator door prepares for opening as it detects the floor arrival sensor when traveling. This function shortens the waiting time for door to open.

- **Automatic re-leveling when door opens:**
  Floor leveling may fluctuate when weight changes or when false operation occurs. This mode automatically re-levels the elevator at low speed as the door opens.

- **Rescue operation to the nearest floor:**
  When power failure occurs suddenly, the elevator automatically travels to the nearest floor for landing to ensure passenger safety.

- **Auto-tuning with load:**
  This feature enables auto-tuning for a dynamic or static motor that is equipped with a load. The elevator rope does not need to be removed.

- **Fire operation:**
  When fire alarm is ON, the elevator automatically returns to the rescue floor and will not respond to any calls from the hall to ensure passenger safety.

- **Encoder offset auto-tuning with load:**
  This feature supports various encoder types and encoder offset tuning of permanent magnetic motors. Also enables auto-tuning for a dynamic or static motor that is equipped with load. The elevator rope does not need to be removed.

- **Attendant operation:**
  When the attendant switch is pressed inside the elevator car, the attendant operation mode is ON and an operator inside the elevator can
  (1) answer calls from the elevator hall and decide whether to accept or decline the call,
  (2) control the elevator door's open and close,
  (3) control elevator travel up and down.

- **Energy saving lights and fans control:**
  The lighting and fans are automatically turned off for energy-saving purposes when there are no instructions from inside the elevator or calls from the hall during the set time.

- **Automatic detection of floor heights:**
  Floor heights are automatically measured and saved into the MCU as the elevator travels from the top floor to the bottom floor. This feature automatically calculates the leveling position for landing and the optimal operation speed for traveling between each floor.

- **Automatic adjustment of car position:**
  The car position is constantly monitored and analyzed by the system. When it fails to match with the system analysis due to malfunctions or human errors, the elevator will automatically return to the nearest position correction zone for adjustment. Once the car position is identified, the elevator is restored to normal operation status.

- **False car call cancellation:**
  This function allows a user to cancel the wrong floor selection pressed on the control board.

- **Cancellation of reverse direction instructions:**
  When the elevator responds to calls in the same direction or when the traveling direction is reversed, the reverse direction calls are erased and will not be registered.

- **Load by-pass:**
  When the elevator detects a full load greater than 80% of the car's rated capacity, it will only respond to the floor selected inside the elevator. All calls from the hall are registered but will delay response until the car's weight is reduced to lower than 80% of the rated capacity.

- **Time-based service:**
  The elevator can be set to respond to only certain floor instructions or to travel between certain floors during a set time.

- **Rush hour operation:**
  During rush hours, the elevators will only respond to the car instructions after departing from the base floor and will return to the base floor automatically (ignoring calls from the hall) after the last call from the car is finished.

- **Anti-nuisance function:**
  If the system detects and determines any nuisance during operation, the elevator lands at the nearest floor registered on the control board and automatically clears the rest of the calls to minimize wasted energy.

- **Overload protection:**
  When the elevator car weight exceeds 110% of the car's rated capacity, the buzzer sounds and stops the door from closing.

IED Control Terminals

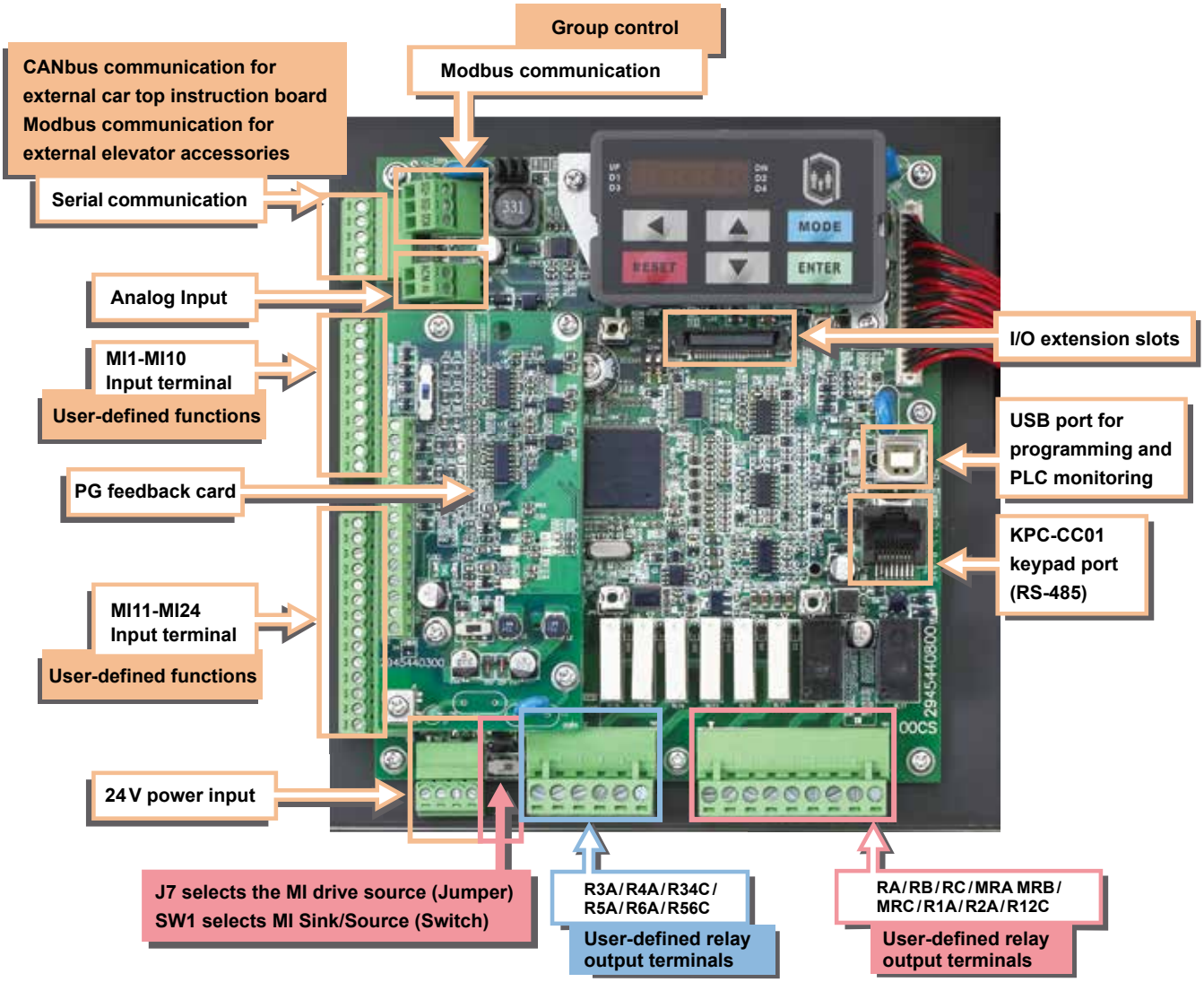

Name	Quantity	Terminal
Multi-function digital input	24 sets, up to a maximum 40 sets via I/O extension slots	1. User-defined functions 2. Photo coupler 3. Input impedance: approximately 3.75 kΩ 4. Input voltage: 0~24 V_{DC}
Multi-function relay output	2 sets (N.O./N.C.) 6 sets (N.O.)	1. User-defined functions 2. Resistive load 5A(N.O.)/3A(N C.) 250 V_{AC} 5A(N.O.)/3A(N C.) 30 V_{DC} 3. Inductive load (COS 0.4) 2.0A(N.O.)/1.2A(N C.) 250 V_{AC} 2.0A(N.O.)/1.2A(N C.) 30 V_{DC}
Modbus communication	3 sets	1. Communicate with KPC-CC01 (optional) 2. Communicate with floor panels 3. Communicate with host controller for monitoring purpose 4. Communication for group control
CANbus communication	1 set	1. Communicate with the car top instruction board
USB port	1 set	1. Computer monitoring, programming
Analog input	1 set	1. Input voltage: +10 V~-10V 2. Input impedance 20 kΩ 3. Resolution 12bit

Wiring

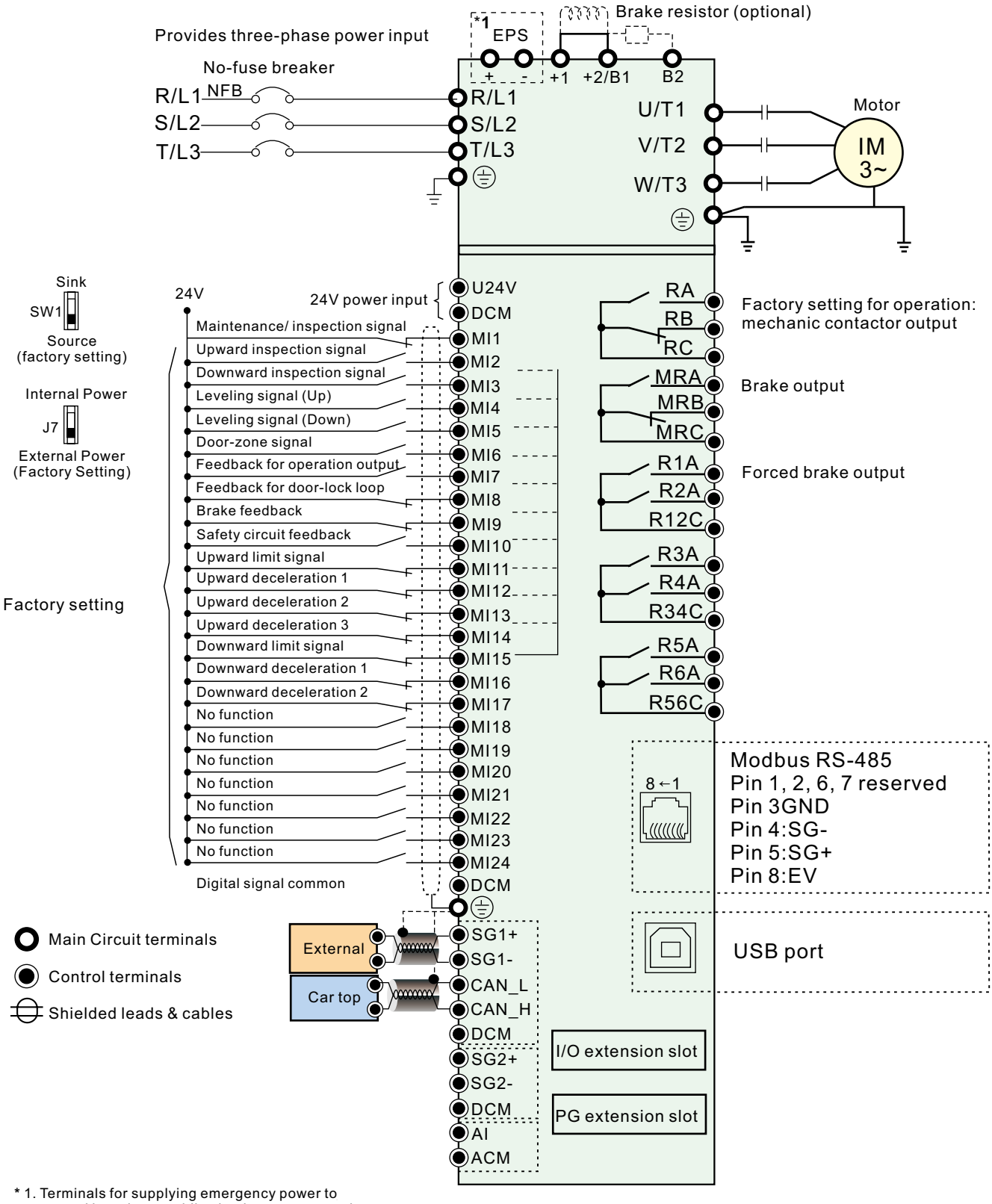

* 1. Terminals for supplying emergency power to control board or providing backup power supply. (Applicable to frame C and D models.)

Product Specifications

■ 230 V Series

230V	Frame	B			C			D			E	
	Model IED_ _ _A23A	022*	037*	040	055	075	110	150	185	220	300	370
	Applicable motor output (kW)	2.2	3.7	4.0	5.5	7.5	11	15	18.5	22	30	37
	Applicable motor output (HP)	3	5	5	7.5	10	15	20	25	30	40	50
Output	Rated output capacity (kVA)	4.8	6.8	7.9	9.6	12	17.9	23.1	30.7	34.7	52.6	64.1
	Rated output for elevators (A)	13.7	19.6	22.8	27.4	34.3	51.4	66.3	88.0	99.4	151.0	184.0
	Maximum output voltage (V)	Three-phase corresponding input voltage										
	Range of output frequency (Hz)	0.00~400 Hz										
	Carrier frequency (kHz)	2~15 kHz									2~9 kHz	
Enter	Input current (A)	26	37.4	25	30	38	56	723	95	107	163	200
	Input voltage range	Single Phase 200~240 V 50/60Hz	Single Phase 200~240 V 50/60Hz	Three-phase power supply 200~240 V 50/60 Hz								
	Power voltage alteration allowed	10 % (180~160 V)										
	Power frequency alteration allowed	5 % (47~63 Hz)										
	Cooling method	Forced cold wind										

■ 460 V Series

460V	Frame	B	C			D				E			
	Model IED_ _ _A43A	040	055	075	110	150	185	220	300	370	450	550	750
	Applicable motor output (kW)	4.0	5.5	7.5	11	15	18.5	22	30	37	45	55	75
	Applicable motor output (HP)	5	7.5	10	15	20	25	30	40	50	60	75	100
Output	Rated output capacity (kVA)	9.2	10.4	13.5	18.3	24	30.3	36	46.2	63.7	80	96.4	116.3
	Rated output for elevators (A)	13.1	14.9	19.4	26.3	34.3	43.4	51.4	66.3	92	114	138	167
	Maximum output voltage (V)	Three-phase power of 380~480V 50/60Hz											
	Range of output frequency (Hz)	0.00~400 Hz											
	Carrier frequency (kHz)	2~15 kHz							2~9 kHz			2~6 kHz	
Enter	Input current (A)	17	18	22	28	37	47	56	72	99	123	150	180
	Input voltage range	Three-phase corresponding input voltage											
	Power voltage alteration allowed	10 % (342~528 V)											
	Power frequency alteration allowed	5 % (47~63 Hz)											
	Cooling method	Forced cold wind											

All 230V models are 3-phase except the following two models:
1-phase 230 V: IED022A21A (2.2 kW)
1-phase 230 V: IED037A21A (3.7 kW)

共同特性	Control method	1: V/F, 2: VF+PG, 3: SVC, 4: FOC+PG, 5: TQC+PG, 6: FOC+PM
	Starting torque	The starting torque can reach up to 150 % or more at the frequency of 0.5 Hz. The control mode for FOC + PGC and FOC + PM is 0 Hz.
	Speed control range	1:100 (with external PG up to 1:1000)
	Speed control precision	+/-0.5 % (up to +/-0.02% with external PG card)
Control Characteristics	Speed response bandwidth	5Hz (vector control up to 40 Hz)
	Maximum output frequency (Hz)	0.00 to 400 Hz
	Frequency output accuracy	Digital command 0.005%, analog command 0.5%
	Frequency setting resolution	Digital command 0.01 Hz, Analog command: 1/4096 (12 bit) of maximum output frequency
	Torque limit	Max. 200 % of torque current
	Torque accuracy	±5 %
	Acceleration/deceleration time	0.00~600.00 Sec
	Analog input signal	±10 V
Protection Features	Motor protection	Electronic thermal relay protection
	Over-current protection	200 % of current clamp for rated current, 250 % of over-current protection for rated current
	Ground current protection	Ground current protectin level is 50% of rated current of the AC motor drive
	Overload capacity	150 % of rated output current for 60 seconds, 200 % for 3 seconds
	Over-voltage protection	Over-voltage level: V_{DC}>410/820 V
	Over-voltage protection for input power	Metal Oxide Varistor (MOV)
	Over-temperature protection	Built-in temperature sensor
Environment	Protection level	NEMA 1/IP20
	Operation temperature	-10°C~40°C, Derating up to 50°C
	Storage temperature	-20°C~60°C
	Humidity	Below 90 % RH (no condensation)
	Vibration	1.0G below 20 Hz, 0.6 G when 20~60 Hz
	Cooling system	Fan cooling (When IED is ON the fan turns ON; when IED is OFF the fan turns OFF)
	Installation height	Below the altitude of 1,000 m (non-corrosive gases and liquids, dust-free)
International certification		CE Mark Safety Approved; UL/cUL Safety Approved

Dimensions of the IED Series

Unit: mm[inch]

■ Frame: B

Models

IED022A21A

IED037A21A

IED040A23A、IED040A43A

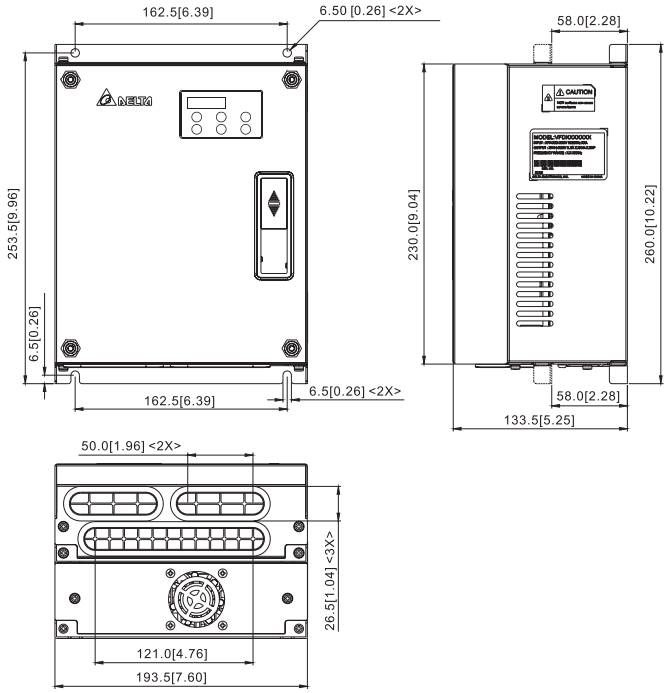

■ Frame: C

Models

IED055A23B、IED055A43B

IED075A23B、IED075A43B

IED110A23B、IED110A43B

IED150A43B、IED185A43B

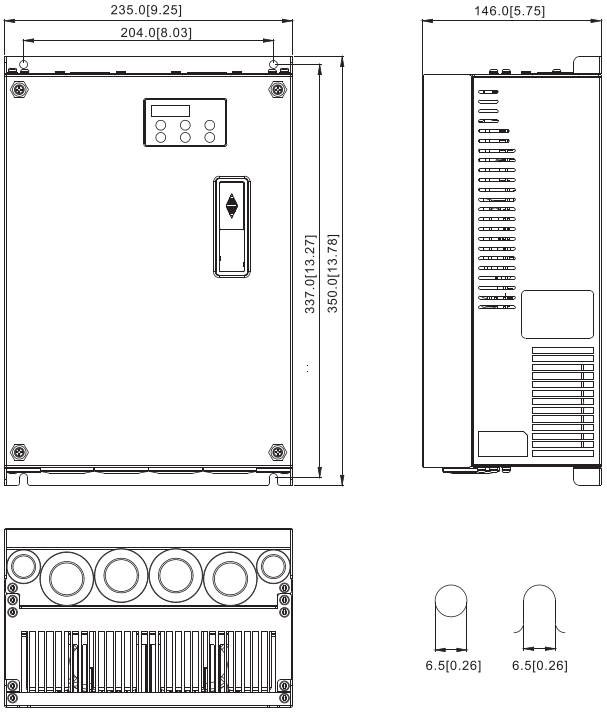

■ Frame: D

Unit: mm[inch]

Models

IED150A23B、IED150A43A

IED185A23B、IED185A43A

IED220A23B、IED220A43B

IED300A43A

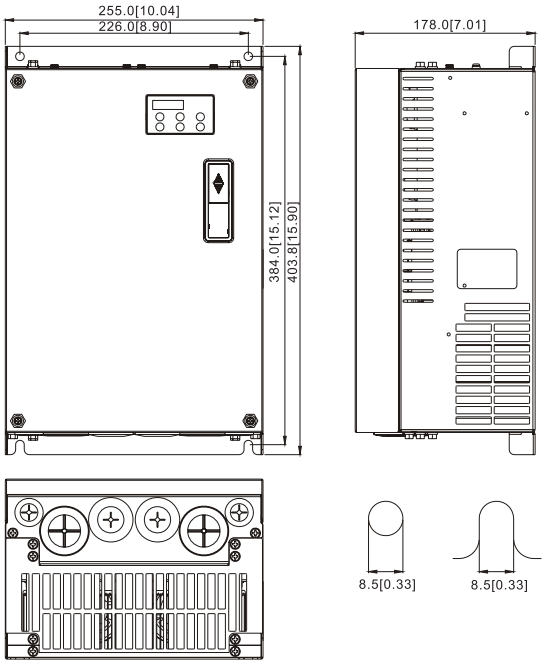

■ Frame: E

Models

IED300A23A

IED370A23A、IED370A43A

IED450A43A、IED550A43A

IED750A43A

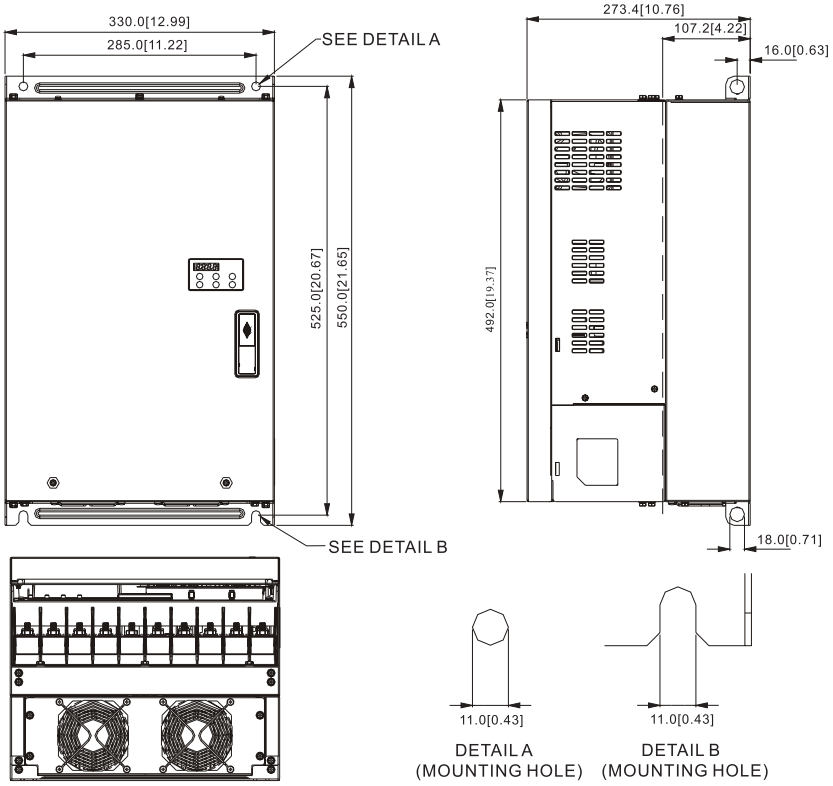

Dimensions of Accessories

■ EA-CT01
Car-top Signal Junction Board

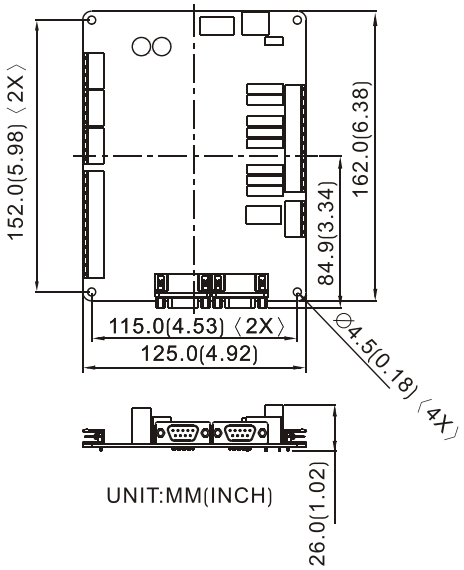

■ EA-CP16
Elevator Car Command Board

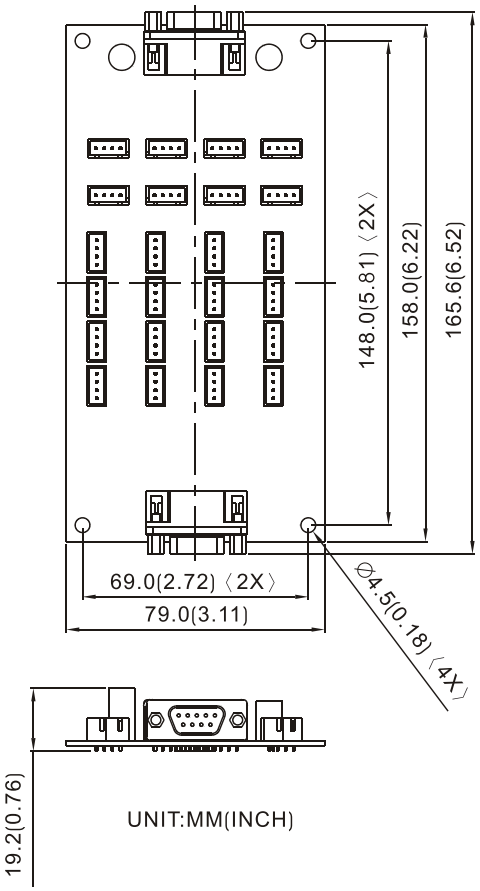

■ EA-CT01
Car-top Signal Junction Board

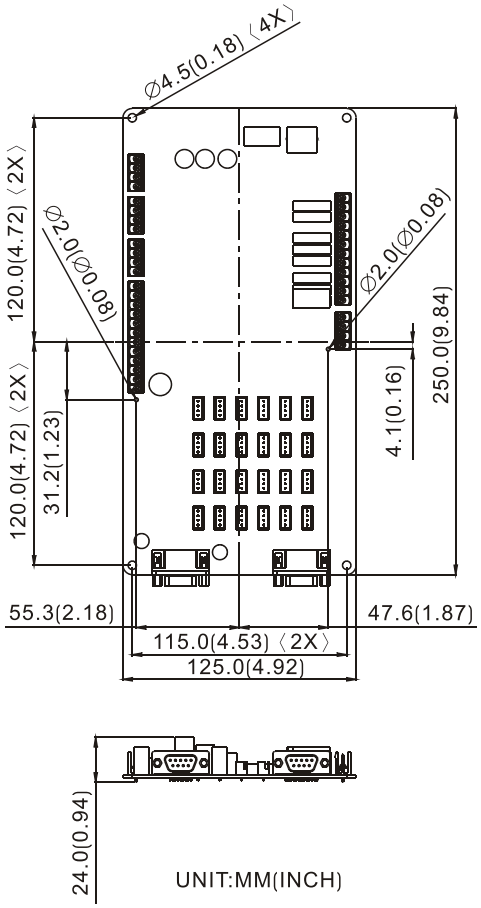

Dimensions of Accessories

EA-FM02MH
Vertical/Horizontal Matrix Display Board

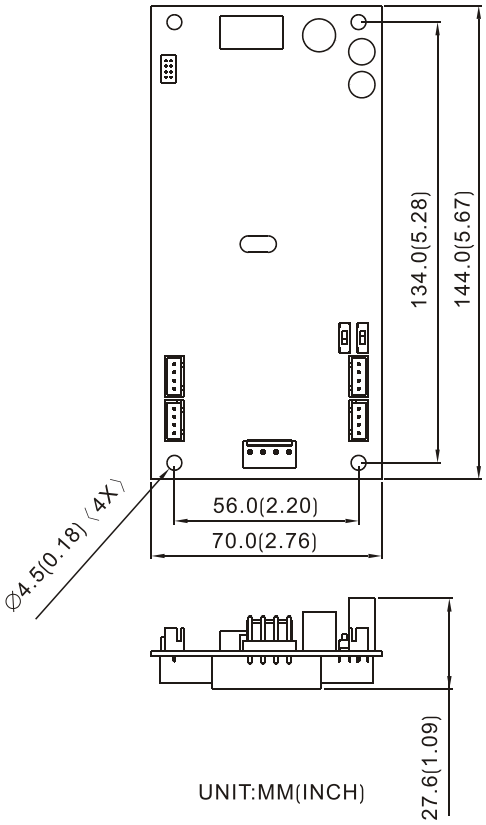

EA-FM02MV
Vertical Display Board

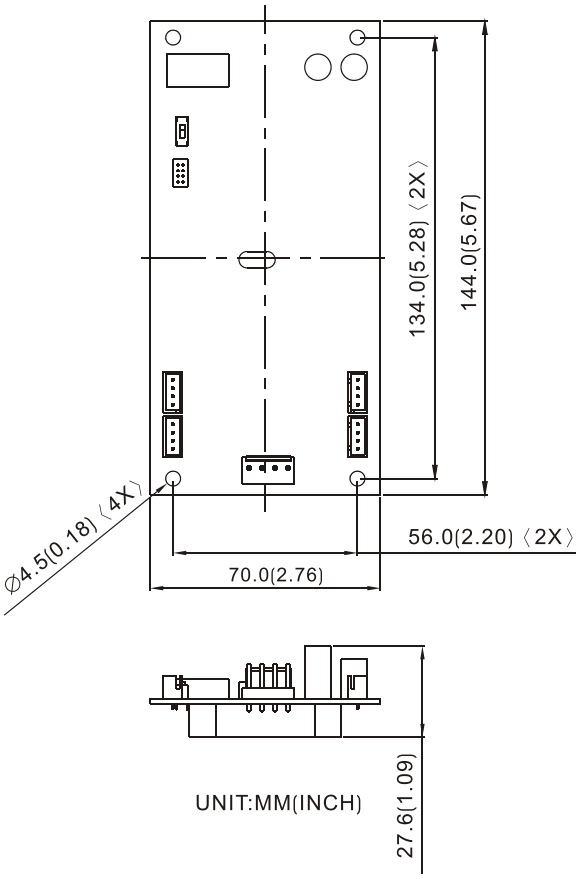

IED Accessories

Car-top Signal Junction Board (EA-CT01)

Terminals	Descriptions
I1	Front door open limit
I2	Front door close limit
I3	Front door light curtain signal input
I4	Back door open limit
I5	Back door close limit
I6	Back door light curtain signal
I7	Overload input
I8	Full load input
I9	Reserve
SAI/SBI/GND/VS	Analog input terminals for the connection of weighing signal input
CAN+/CAN-	CAN communication
MOD+/MOD-	Modbus communication
J4, J5	Lift car command board communication
Ob2-0b 1-COMd	Front door open/close output
Oc1-COMc	Full load signal output
Oc3-0c2-COMc	Back door open/close output
Oc1-COMb	Front door opening
Oc2-COMb	Fan output
Od3-C0Mb	Light output
NO-COMa/NC-COMa	Reserved

Elevator Car Command Board (EA-CP16)

Terminals	Descriptions
CN1	Connection to the car-top board, integrated car-top board, car display board
CN2	Extension slot for connection to another EA-CP16 (More than 16 floors applications)
JP1-JP16	Elevator car's floor button plug-in
JP17~JP24	Door open/close outputs; door open delay output; non-stop output; attendant operation output; independent operation output; fireman output, etc.
JP17	Front door open control
JP18	Front door close control
JP19	Front door open delay control/display
JP20	Load by pass (non-stop) control/display
JP21	Attendant control/display
JP22	Reverse direction of non-stop/attendant display
JP23	Independent operation control /display
JP24	Fireman control/display

Vertical/Horizontal Matrix Display Board (EA-FM02MH)

Terminals	Descriptions
J1	Modbus communication and power cord terminals, 4-pin interface: Pin 2 and Pin 3 are Modbus communication cable wires; Pin 1 and Pin 4 are power cord wires.
J2、J3	Up/Down call button interface: Pin 2 and Pin 3 are wires for number of input switches; Pin 1 and Pin 4 are used for button indicator output signal control
J4	For up-to-position/down-to-position indicator output signal control
J5	Fire/Lock button interface: Pin 1 and Pin 4 are used for Fire button input; Pin 2 and Pin 3 are used for Lock button input

Vertical Display Board (EA-FM02MV)

Terminals	Descriptions
J1	Modbus communication and power cord terminals, 4-pin interface: Pin 2 and Pin 3 are Modbus communication cable wires; Pin 1 and Pin 4 are power cord wires.
J2、J3	Up/Down call button interface: Pin 2 and Pin 3 are wires for number of input switches; Pin 1 and Pin 4 are used for button indicator output signal control
J4	Fire button interface: Pin 2 and Pin 3 are wires for number of input switches; Pin 1 and Pin 4 are used for button indicator output signal control
J5	Lock button interface: Pin 2 and Pin 3 are wires for number of input switches; Pin 1 and Pin 4 are used for button indicator output signal control

Integrated Elevator Car Command Board (EA-CTP01)

Terminals	Descriptions
I1	Front door open limit
I2	Front door close limit
I3	Front door light curtain input
I4	Back door open limit
I5	Back door close limit
I6	Back door light curtain signal
I7	Overload input
I8	Full load input
I9	Reserve
SAI/SBI/GND/VS	Analog input terminals for the connection of weighing signal input
CAN+/CAN-	CAN communication
MOD+/MOD-	Modbus communication
CN1	Connection to the primary car-top command board
CN2	Connection to the secondary car-top command board
JP1-JP16	Elevator car's floor button plug-in
JP17	Front door open control
JP18	Front door close control
JP19	Front door open delay control/display
JP20	Load by pass (non-stop) control/display
JP21	Attendant control/display
JP22	Reverse direction of non-stop/attendant display
JP23	Independent operation control/display
JP24	Fireman control/display
Ob1 ~ Ob3 Oc1 ~ Oc3 NO-AM/NC-AM	Multifunction relay outputs Door open/close signals; Up-/down-to-position signals; Elevator car fan/light control;
Od2~Od1-COMd	Front door open/close output
Oc1-COMc	Full load signal output
Oc3~Oc2-COMc	Back door open/close output
Ob1-COMb	Front door opening
Ob2-COMb	Fan output
Ob3-COMb	Light output
NO-COMa/NC-COMa	Reserved

Input card (EMED-D411A110V)

Terminals	Descriptions
HCM	Digital multi-function input terminals, AC power common
HI1~HI4	Input voltage: $100V_{AC}$~$130V_{AC}$ Input frequency: 57~63Hz

PG feedback card for open-collector, Line Driver and UVW encoder signal (EMED-PGAB)

Terminals	Descriptions
VP	Output power of encoder Output voltage: +5V/+12V (determined by SW1) Maximum output current: 200mA
0V	Power source common for encoder
A, /A, B, /B, Z, /Z	Incremental encoder signal input Line driver input complies to the RS422 standard Single-phase input of +12 V open collector signal (determined by SW2) Maximum input frequency: 100 kHz
U, /U, V, /V, W, /W	Hall sensor signal input Maximum input frequency: 50 kHz
SW1 SW2	Output voltage +5 V / +12 V selection Input encoder signal selection for open-collector / Line Driver

PG feedback card for Heidenhain ERN1387, EnDat2.1 and HIPERFACE (EMED-PGHSD)

Terminals	Descriptions
Vin	Port for voltage input (for adjusting the value of voltage amplitude from push-pull pulse output) Maximum input voltage: 24 V_{DC}
GND	Common ground for Vin and output siganl
A/O, B/O	Signal for push-pull pulse output Maximum output current: 20 mA Maximum output frequency: 50 kHz
AO, /AO, BO, /BO	Signal for differential pulse output Maximum output current: 30 mA Maximum output frequency: 100 kHz
D-SUB Connector (J3)	Encoder signal input Supports Heidenhain ERN1387 encoder. Heidenhain EnDat2.1 SICK HIPERFACE
SW1 SW2	Output IN.P/EX.P selection Output voltage +5V/+12V selection

Model and Accessories Selection

Category	IED Models	
	230 VAC 1-phase / 3-phase	460 VAC 3-phase
A	IED022A21A	
	IED037A21A	
	IED040A23A	IED040A43A
	IED055A23B	IED055A43B
	IED075A23B	IED075A43B
	IED110A23B	IED110A43B
	IED150A23B	IED150A43B
	IED185A23B	IED185A43B
	IED220A23B	IED220A43B
	IED300A23A	IED300A43A
	ED370A23A	IED370A43A
		IED450A43A
		IED550A43A
		IED750A43A
Category	**Accessories**	
B-1.1	EA-CT01	Car-top signal junction board
B-1.2	EA-CP16	Elevator car command board
8-2	EA-CTP01	Integrated elevator car command board
C-1	EA-FM02MH	Vertical / horizontal matrix display board
C-2	EA-FM02MV	Vertical display board
G-1	EA-CB3C	CANopen communication cable
G-2	EA-CB05	CANopen communication cable
D-1	EMED-PGAB	PG feeback card
D-2	EMED-PGHSD	PG feedback card
E	EMED-D411A	$110V_{AC}$ input card
F	KPC-CC01	LCD keypad

Example:
How to select a suitable IED model and elevator accessories for the passenger elevator in a 7-floors building?
=(A) + (B-1.1) + (B-1.2) + (C-1*) + 7 x (C-1*) + (G-2) + (D-1**)
=(A) + (B-2) + (C-1*) + 7 x (C-1*) + (G-1) + (D-1**)

* EA-FM02MH and EA-FM02 MV are available for different elevator needs.
* EMED-PGAB and EMED-PGHSD are available for different elevator needs.

IED Accessories

KPC-CC01

- Highly illuminated LCD display
- Modbus RS-485 communication
- Supporting language:
  Traditional Chinese, Simplified Chinese, English

EA-CB3C

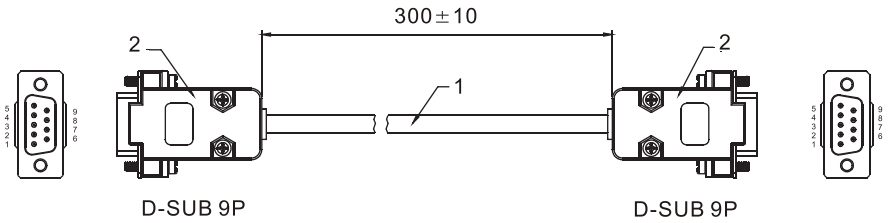

EA-CB05

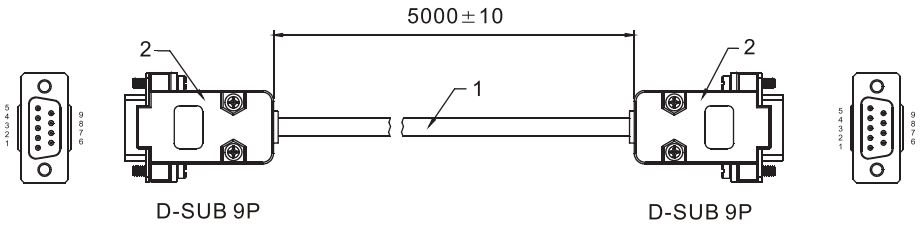

EA-CB3C	Descriptions
Length：300±10mm	Length：5000±50mm
Connector：D-SUB 9PIN	Connector：D-SUB 9PIN
Cable: 9 cores, black, screened/shielded, bears 300V voltage	Cable: 9 cores, black, screened/shielded, bears 300V voltage

IED Car-top Signal Junction Board and Floor Display Boards Connection

EA-CT01

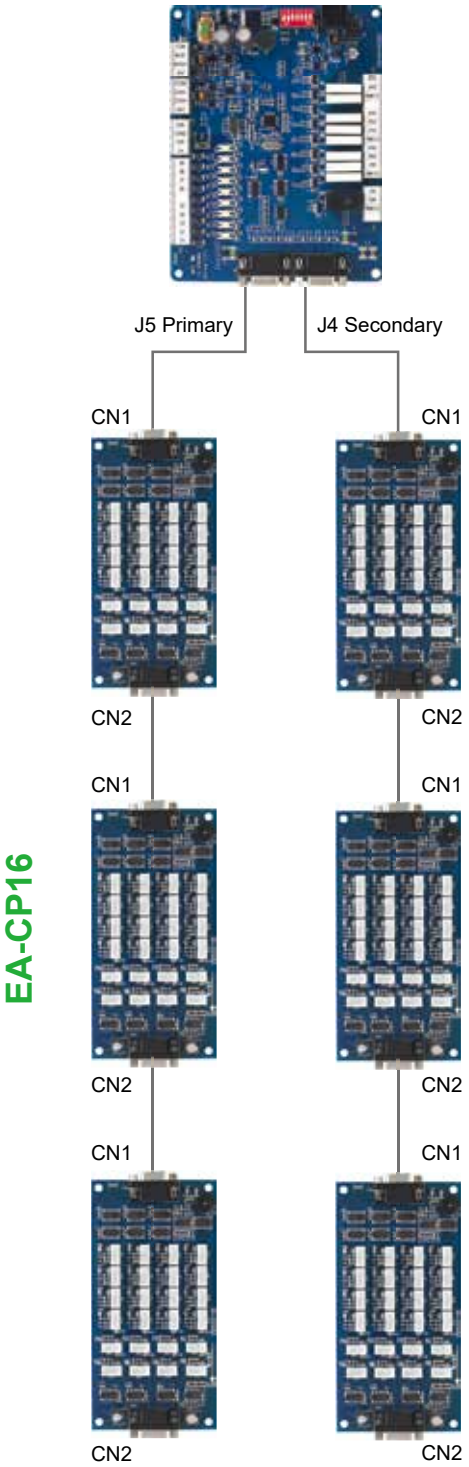

*JP5: max. connection to 3 sets of EA-CP16
JP4: max. connection to 3 sets of EA-CP16

*J5: For primary door control inside the elevator
J4: For secondary door control inside elevator

EA-CTP01

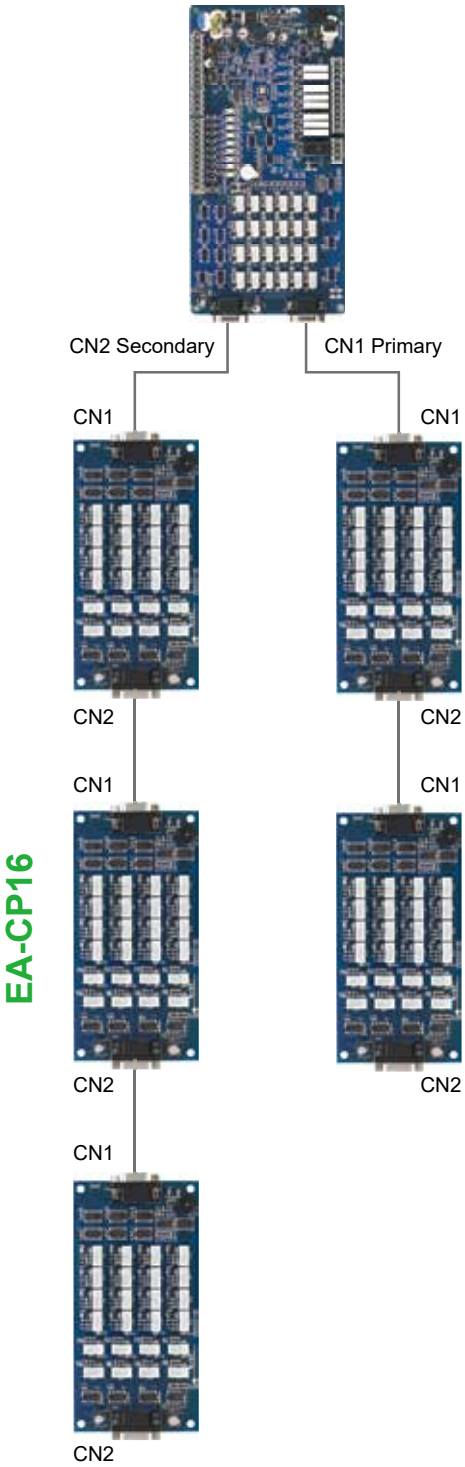

*The integrated elevator car command board (EA-CTP01) includes the functions of elevator car command board (EA-CP16)

*CN1: max. connection to 2 sets of EA-CP16
CN2: max. connection to 3 sets of EA-CP16

*CN1: For primary door control inside the elevator
CN2: For secondary door control inside elevator

Applications: IED Series and Accessories

Serial Connection (TB6)
Connects to car-top board via CANbus and communicates to the hall via Modbus

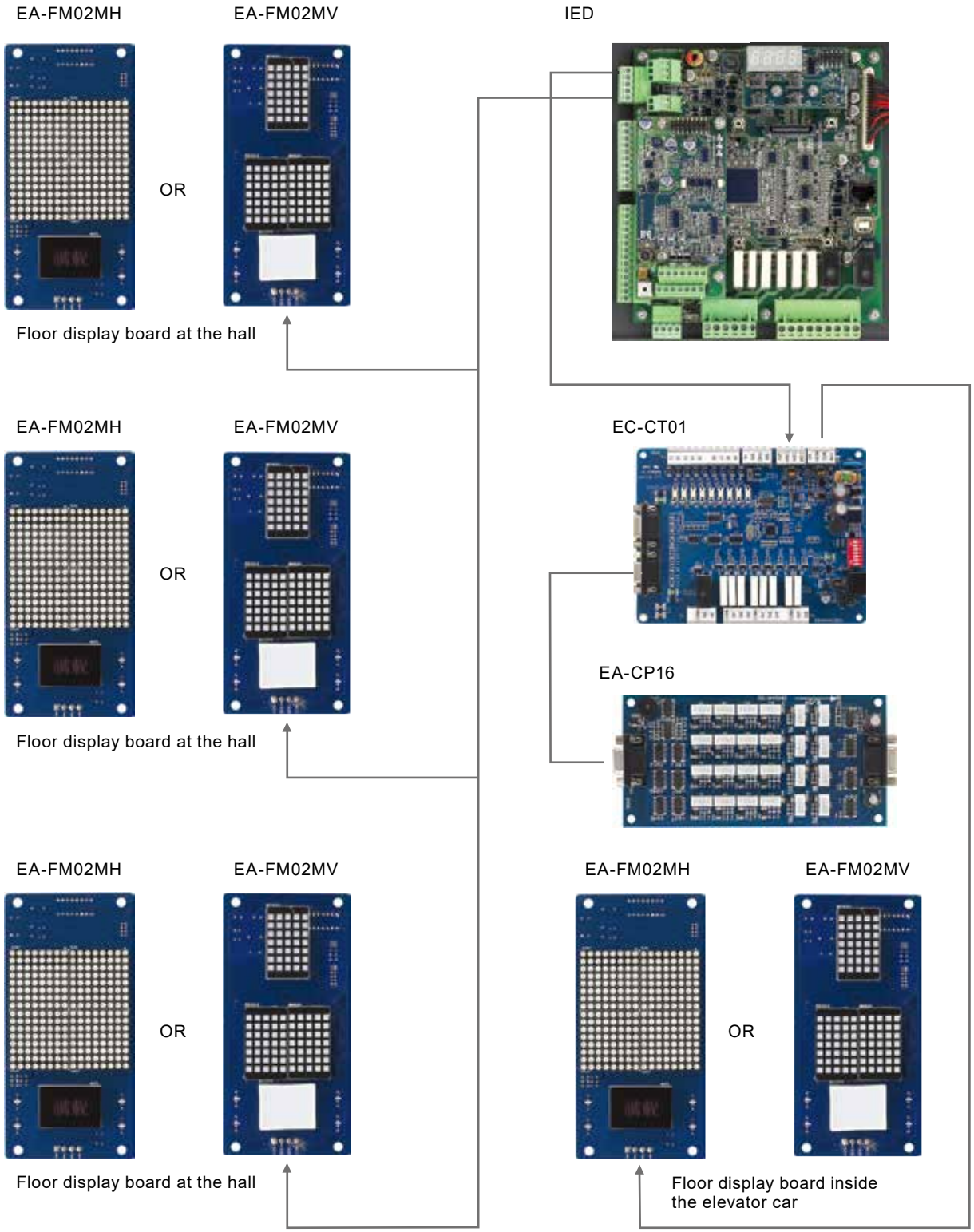

Serial Connection (TB6)
Connects to car-top board via CANbus and communicates to the hall via Modbus

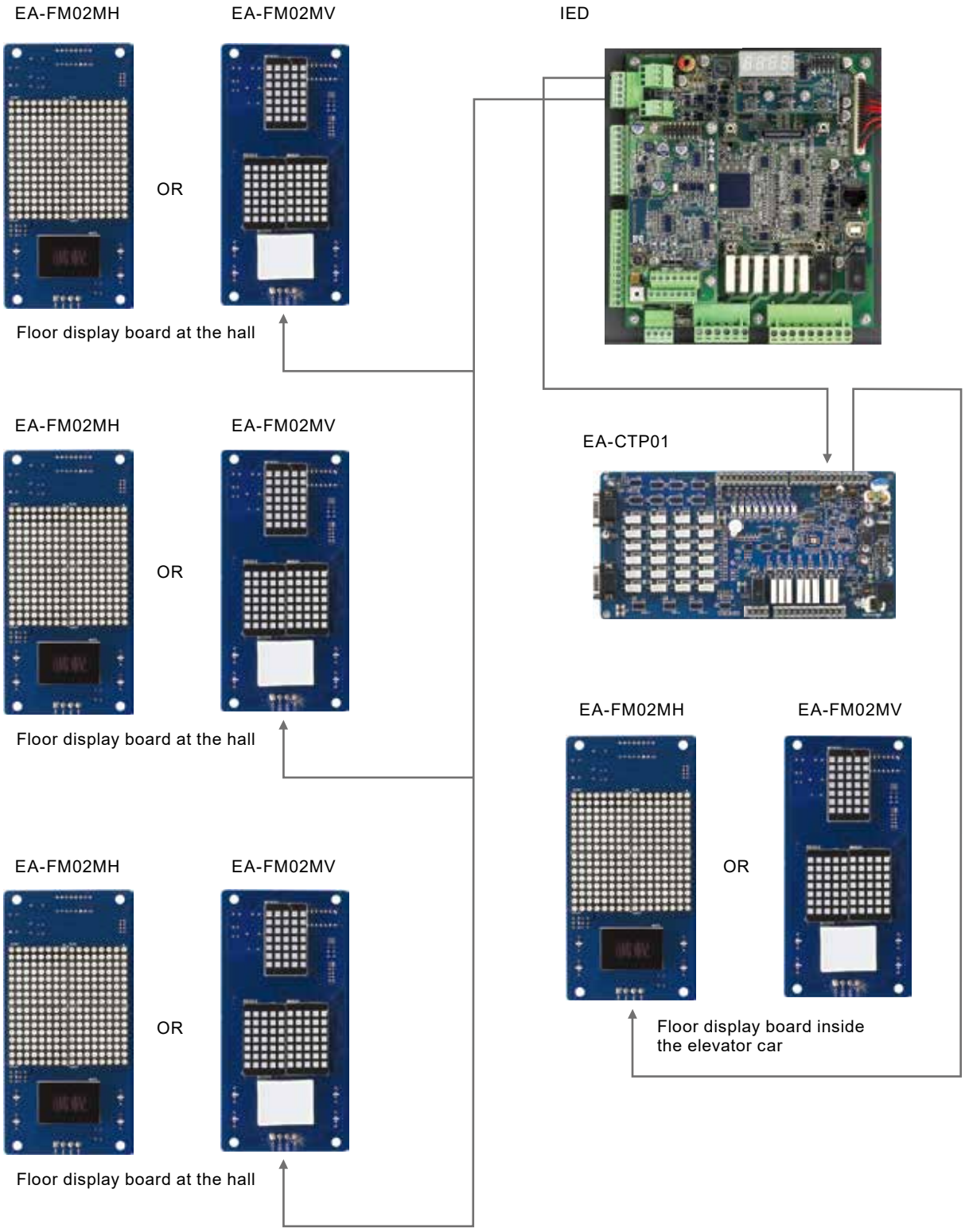

Global Operations

ASIA (Taiwan)

Taoyuan Technology Center (Green Building)

Taoyuan Plant 1

Tainan Plant (Diamond-rated Green Building)

ASIA (China)

Wujiang Plant 3

Shanghai Office

ASIA (Japan)

Tokyo Office

ASIA (India)

Rudrapur Plant
(Green Building)

EUROPE

Amsterdam, the Netherlands

AMERICA

Research Triangle Park, U.S.A.

▲ 6 Factories ■ 117 Branch Offices ⊙ 13 R&D Centers ■ 915 Distributors

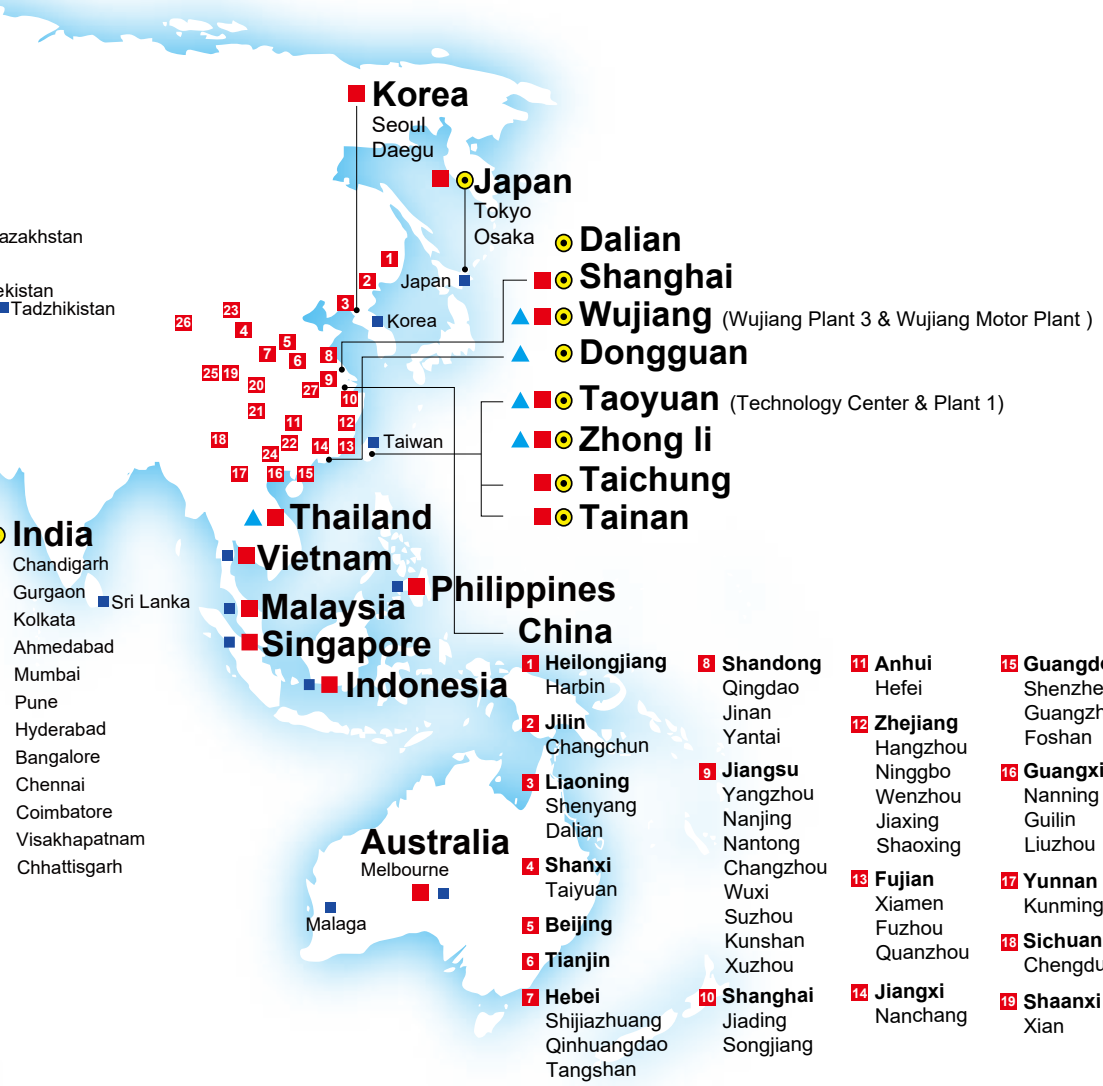

1 **Heilongjiang** Harbin
2 **Jilin** Changchun
3 **Liaoning** Shenyang, Dalian
4 **Shanxi** Taiyuan
5 **Beijing**
6 **Tianjin**
7 **Hebei** Shijiazhuang, Qinhuangdao, Tangshan
8 **Shandong** Qingdao, Jinan, Yantai
9 **Jiangsu** Yangzhou, Nanjing, Nantong, Changzhou, Wuxi, Suzhou, Kunshan, Xuzhou
10 **Shanghai** Jiading, Songjiang
11 **Anhui** Hefei
12 **Zhejiang** Hangzhou, Ningbo, Wenzhou, Jiaxing, Shaoxing
13 **Fujian** Xiamen, Fuzhou, Quanzhou
14 **Jiangxi** Nanchang
15 **Guangdong** Shenzhen, Guangzhou, Foshan
16 **Guangxi** Nanning, Guilin, Liuzhou
17 **Yunnan** Kunming
18 **Sichuan** Chengdu
19 **Shaanxi** Xian
20 **Henan** Zhengzhou, Luoyang, Changyuan
21 **Hubei** Wuhan, Xiangfan
22 **Hunan** Changsha, Hengyang
23 **Inner Mongolia** Baotou
24 **Guizhou** Guiyang
25 **Gansu** Lanzhou
26 **Xinjiang** Urumqi
27 **Anhui** Wuhu

Smarter. Greener. Together.

Industrial Automation Headquarters

Delta Electronics, Inc.
Taoyuan Technology Center
No.18, Xinglong Rd., Taoyuan District,
Taoyuan City 33068, Taiwan
TEL: 886-3-362-6301 / FAX: 886-3-371-6301

Asia

Delta Electronics (Shanghai) Co., Ltd.
No.182 Minyu Rd., Pudong Shanghai, P.R.C.
Post code : 201209
TEL: 86-21-6872-3988 / FAX: 86-21-6872-3996
Customer Service: 400-820-9595

Delta Electronics (Japan), Inc.
Tokyo Office
Industrial Automation Sales Department
2-1-14 Shibadaimon, Minato-ku
Tokyo, Japan 105-0012
TEL: 81-3-5733-1155 / FAX: 81-3-5733-1255

Delta Electronics (Korea), Inc.
Seoul Office
1511, 219, Gasan Digital 1-Ro., Geumcheon-gu,
Seoul, 08501 South Korea
TEL: 82-2-515-5305 / FAX: 82-2-515-5302

Delta Energy Systems (Singapore) Pte Ltd.
4 Kaki Bukit Avenue 1, #05-04, Singapore 417939
TEL: 65-6747-5155 / FAX: 65-6744-9228

Delta Electronics (India) Pvt. Ltd.
Plot No.43, Sector 35, HSIIDC Gurgaon,
PIN 122001, Haryana, India
TEL: 91-124-4874900 / FAX : 91-124-4874945

Delta Electronics (Thailand) PCL.
909 Soi 9, Moo 4, Bangpoo Industrial Estate (E.P.Z),
Pattana 1 Rd., T.Phraksa, A.Muang,
Samutprakarn 10280, Thailand
TEL: 66-2709-2800 / FAX : 662-709-2827

Delta Electronics (Australia) Pty Ltd.
Unit 20-21/45 Normanby Rd., Notting Hill Vic 3168, Australia
TEL: 61-3-9543-3720

Americas

Delta Electronics (Americas) Ltd.
Raleigh Office
P.O. Box 12173, 5101 Davis Drive,
Research Triangle Park, NC 27709, U.S.A.
TEL: 1-919-767-3813 / FAX: 1-919-767-3969

Delta Electronics Brazil
São Paulo Sales Office
Rua Itapeva, 26 - 3°, andar Edificio Itapeva,
One - Bela Vista 01332-000 - São Paulo - SP - Brazil
TEL: 55-12-3932-2300 / FAX: 55-12-3932-237

Delta Electronics International Mexico S.A. de C.V.
Mexico Office
Gustavo Baz No. 309 Edificio E PB 103
Colonia La Loma, CP 54060
Tlalnepantla, Estado de México
TEL: 52-55-3603-9200

EMEA

Headquarters: Delta Electronics (Netherlands) B.V.
Sales: Sales.IA.EMEA@deltaww.com
Marketing: Marketing.IA.EMEA@deltaww.com
Technical Support: iatechnicalsupport@deltaww.com
Customer Support: Customer-Support@deltaww.com
Service: Service.IA.emea@deltaww.com
TEL: +31(0)40 800 3900

BENELUX: Delta Electronics (Netherlands) B.V.
De Witbogt 20, 5652 AG Eindhoven, The Netherlands
Mail: Sales.IA.Benelux@deltaww.com
TEL: +31(0)40 800 3900

DACH: Delta Electronics (Netherlands) B.V.
Coesterweg 45, D-59494 Soest, Germany
Mail: Sales.IA.DACH@deltaww.com
TEL: +49(0)2921 987 0

France: Delta Electronics (France) S.A.
ZI du bois Challand 2, 15 rue des Pyrénées,
Lisses, 91090 Evry Cedex, France
Mail: Sales.IA.FR@deltaww.com
TEL: +33(0)1 69 77 82 60

Iberia: Delta Electronics Solutions (Spain) S.L.U
Ctra. De Villaverde a Vallecas, 265 1º Dcha Ed.
Hormigueras – P.I. de Vallecas 28031 Madrid
TEL: +34(0)91 223 74 20

Carrer Llacuna 166, 08018 Barcelona, Spain
Mail: Sales.IA.Iberia@deltaww.com

Italy: Delta Electronics (Italy) S.r.l.
Via Meda 2–22060 Novedrate(CO)
Piazza Grazioli 18 00186 Roma Italy
Mail: Sales.IA.Italy@deltaww.com
TEL: +39 039 8900365

Russia: Delta Energy System LLC
Vereyskaya Plaza II, office 112 Vereyskaya str.
17 121357 Moscow Russia
Mail: Sales.IA.RU@deltaww.com
TEL: +7 495 644 3240

Turkey: Delta Greentech Elektronik San. Ltd. Sti. (Turkey)
Şerifali Mah. Hendem Cad. Kule Sok. No:16-A
34775 Ümraniye – İstanbul
Mail: Sales.IA.Turkey@deltaww.com
TEL: + 90 216 499 9910

GCC: Delta Energy Systems AG (Dubai BR)
P.O. Box 185668, Gate 7, 3rd Floor, Hamarain Centre
Dubai, United Arab Emirates
Mail: Sales.IA.MEA@deltaww.com
TEL: +971(0)4 2690148

Egypt + North Africa: Delta Electronics
Unit 318, 3rd Floor, Trivium Business Complex, North 90 street,
New Cairo, Cairo, Egypt
Mail: Sales.IA.MEA@deltaww.com

DELTA_IA-MDS_IED_C_EN_20200818