Smarter. Greener. Together.

Industrial Automation Headquarters

Delta Electronics, Inc.
Taoyuan Technology Center
No.18, Xinglong Rd., Taoyuan City,
Taoyuan County 33068, Taiwan
TEL: 886-3-362-6301 / FAX: 886-3-371-6301

Asia

Delta Electronics (Jiangsu) Ltd.
Wujiang Plant 3
1688 Jiangxing East Road,
Wujiang Economic Development Zone
Wujiang City, Jiang Su Province, P.R.C. 215200
TEL: 86-512-6340-3008 / FAX: 86-769-6340-7290

Delta Greentech (China) Co., Ltd.
238 Min-Xia Road, Pudong District,
ShangHai, P.R.C. 201209
TEL: 86-21-58635678 / FAX: 86-21-58630003

Delta Electronics (Japan), Inc.
Tokyo Office
2-1-14 Minato-ku Shibadaimon,
Tokyo 105-0012, Japan
TEL: 81-3-5733-1111 / FAX: 81-3-5733-1211

Delta Electronics (Korea), Inc.
1511, Byucksan Digital Valley 6-cha, Gasan-dong,
Geumcheon-gu, Seoul, Korea, 153-704
TEL: 82-2-515-5303 / FAX: 82-2-515-5302

Delta Electronics Int'l (S) Pte Ltd.
4 Kaki Bukit Ave 1, #05-05, Singapore 417939
TEL: 65-6747-5155 / FAX: 65-6744-9228

Delta Electronics (India) Pvt. Ltd.
Plot No 43 Sector 35, HSIIDC
Gurgaon, PIN 122001, Haryana, India
TEL : 91-124-4874900 / FAX : 91-124-4874945

Americas

Delta Products Corporation (USA)
Raleigh Office
P.O. Box 12173,5101 Davis Drive,
Research Triangle Park, NC 27709, U.S.A.
TEL: 1-919-767-3800 / FAX: 1-919-767-8080

Delta Greentech (Brasil) S.A.
Sao Paulo Office
Rua Itapeva, 26 - 3° andar Edificio Itapeva One-Bela Vista
01332-000-São Paulo-SP-Brazil
TEL: 55 11 3568-3855 / FAX: 55 11 3568-3865

Europe

Deltronics (The Netherlands) B.V.
Eindhoven Office
De Witbogt 15, 5652 AG Eindhoven, The Netherlands
TEL: 31-40-2592850 / FAX: 31-40-2592851

*We reserve the right to change the information in this manual without prior notice.

DELTA_IA-ASD_DMCNET Gateway Module_UM_EN_20140704

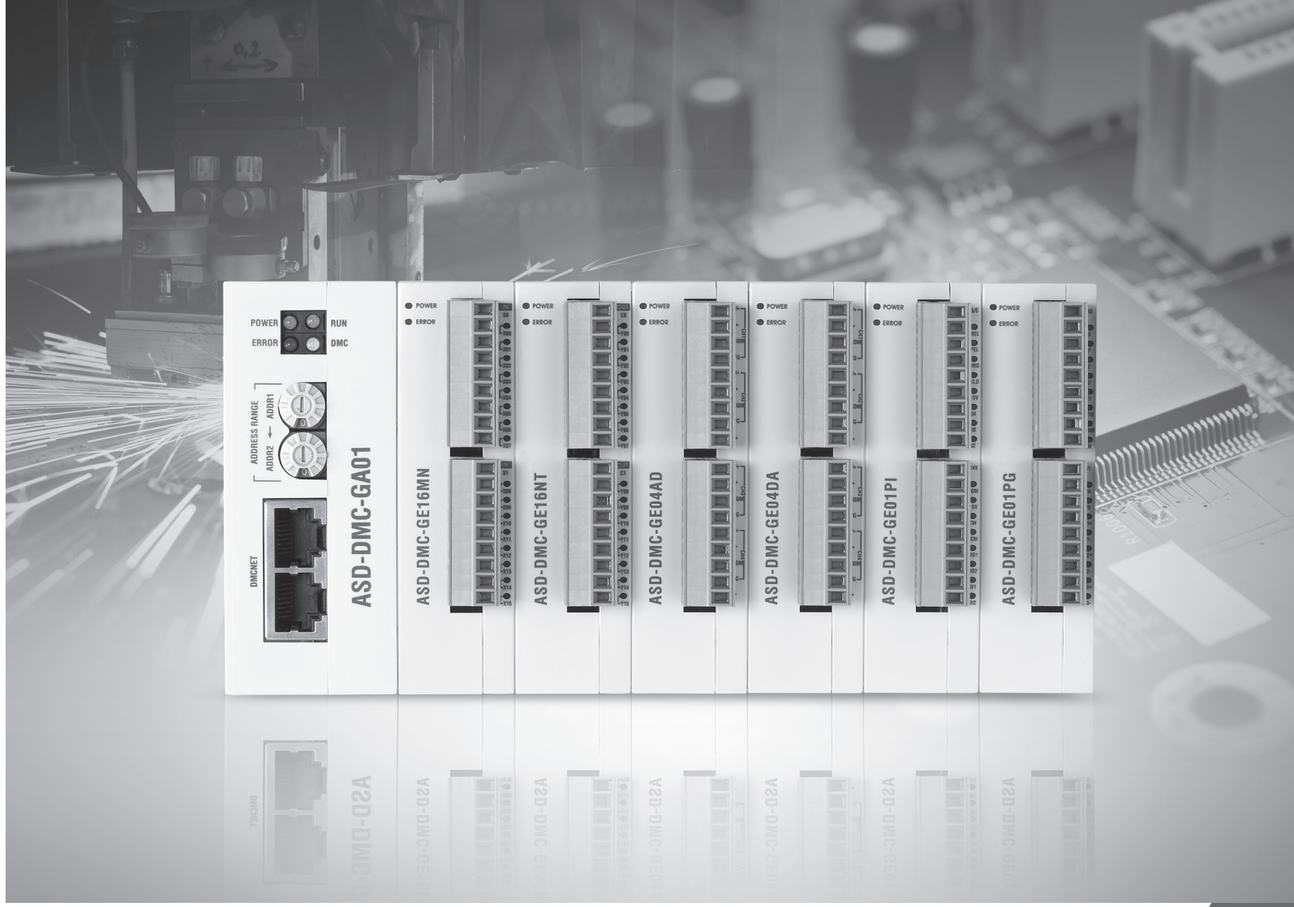

DMCNET Gateway Module User Manual

www.deltaww.com

Smarter. Greener. Together.

About this Manual

User Information

Please store this manual in a safe location.

This manual is subject to change without notice due to the release of new products, improvements and changes in technologies or modifications to data and forms.

Do not copy or reproduce any part of this manual without the written permission of Delta Electronics Co., Ltd.

Trademarks

Windows 2000/XP, Visual Studio, Visual C++, and Visual BASIC are all registered trademarks owned by Microsoft.

BCB (Borland C++ Builder) is a registered trademark owned by Borland.

The names of other products are only used for identification purposes and the registered trademarks remain the property of their respective owners.

Technical Support and Service

If you require technical support, service and related information or have any questions during the use of this product, please visit our website (http://www.delta.com.tw/industrialautomation) or contact us. We look forward to providing the best possible support and service for your needs. Our contact details are provided below:

ASIA
DELTA ELECTRONICS, INC.
Taoyuan Plant 1
31-1, XINGBANG ROAD,
GUISHAN INDUSTRIAL ZONE,
TAOYUAN COUNTY 33370, TAIWAN, R.O.C.
TEL: 886-3-362-6301
FAX: 886-3-362-7267

JAPAN
DELTA ELECTRONICS (JAPAN), INC.
Tokyo Office
DELTA SHIBADAIMON BUILDING
2-1-14 SHIBADAIMON, MINATO-KU,
TOKYO, 105-0012, JAPAN
TEL: 81-3-5733-1111
FAX: 81-3-5733-1211

NORTH/SOUTH AMERICA
DELTA PRODUCTS CORPORATION (USA)
Raleigh Office
P.O. BOX 12173
5101 DAVIS DRIVE,
RESEARCH TRIANGLE PARK, NC 27709, U.S.A.
TEL: 1-919-767-3813
FAX: 1-919-767-3969

EUROPE
DELTRONICS (THE NETHERLANDS) B.V.
Eindhoven Office
DE WITBOGT 15, 5652 AG EINDHOVEN,
THE NETHERLANDS
TEL: 31-40-259-2850
FAX: 31-40-259-2851

Table of Contents

(This page is intentionally left blank.)

Chapter 1 Installation Environment

1.1 Physical Architecture

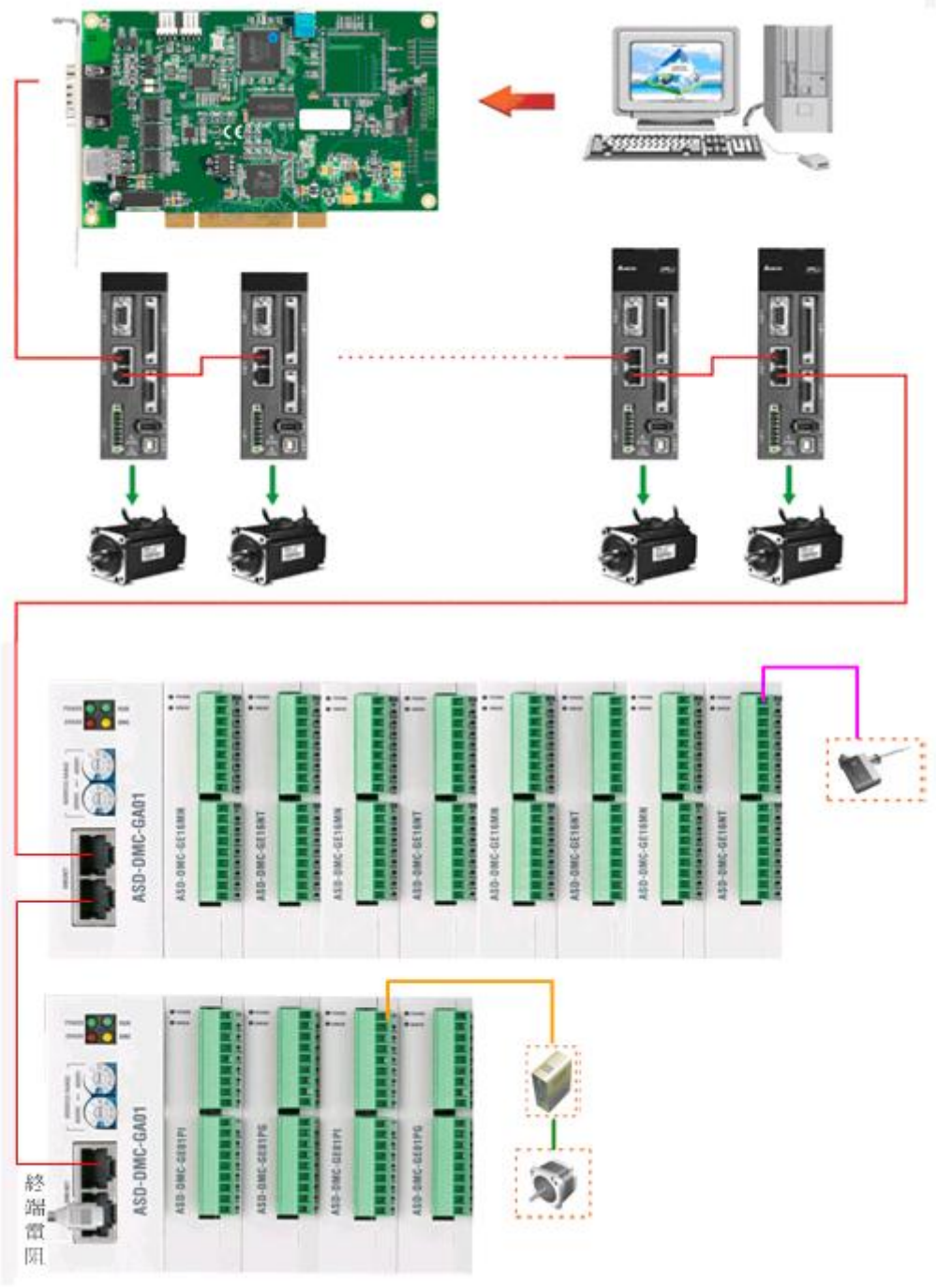

Figure 1.1 Overview of physical connection architecture (servo drive + GA/GE module)

1.2 Electrical Specifications

General

- Supply voltage: 24VDC (15% ~ 20%)
- ESD: 8KV Air Discharge
- EFT: Power Line-2KV
- Digital I/O 1KV
- RS:80MHz ~ 1GHz, 10V/m
- Operating temperature: 0 ^{o}C to 50 ^{o}C

Digital input module (GE16MN)

- Input circuit type: single common port input
- Input signal type: SINK / SOURCE
- Input signal voltage: 24VDC(5mA)
- Response time: 0 to 3ms, adjustable
- Action level(OFF→ON): > 16.5VDC
- Action level(ON→OFF): < 8VDC

Digital output module (GE16NT)

- Output circuit type: transistor
- Output signal type: SINK
- Maximum switching (operating) frequency: 1KHz
- Current specifications: 0.2A/1 point
- Voltage specifications: 24VDC
- Operating frequency: 10KHz
- Response time (OFF→ON): 20us
- Response time (ON→OFF): 30us

High-speed Pulse Module

Pulse Interface Input Port (GE01PH Input)

- Input circuit type: single common port input
- Input signal type: SINK
- Input signal voltage (Sensor): 24VDC(5mA)
- Response time:1ms
- Action level(OFF→ON): > 16.5VDC
- Trigger level(ON→OFF): < 8VDC
- Input signal is 5VDC and differential type only:

  Maximum input pulse frequency: QA+, QB+, QZ+, QA-, QB-, QZ-:4MHz(5mA/1 point)

Pulse Interface Output Port (GE01PH Output)

- Output circuit type: transistor
- Output signal type: SINK
- Output signal voltage: 5–24VDC(30mA/1 point)

  Response frequency: SVON, RALM: 1KHz(30mA/1 point)
- Output circuit type: RS422
- Output signal type: differential
- Output signal voltage: 5–24VDC(30mA/1 point)

  Maximum output pulse frequency: CW, CCW: 4MHz(30mA/1 point)

1.3 ASD-DMC-GA01

■ ASD-DMC-GA01 Connection Diagram

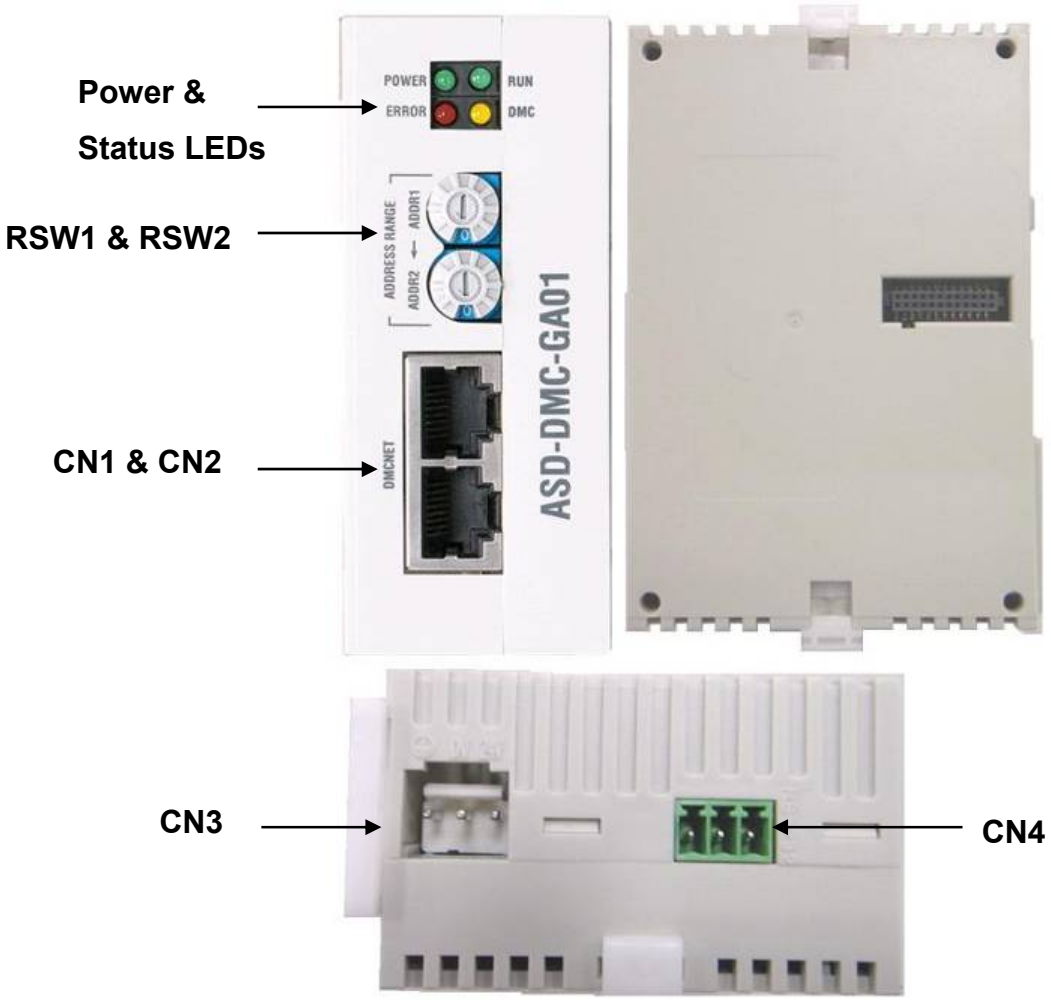

Figure 1.2 Connector diagram

■ ASD-DMC-GA01 Module and Connectors

Figure 1.3 Power & Status LEDs

Label	Description
POWER	Voltage status indicator
RUN	Operation indicator
ERROR	Error indicator
DMC	DMC communication indicator

Figure 1.4

RSW1 & RSW2

Pin	Label	Description
0 – F	Node Number	Node ID

※When the dial is turned to 0, D - F will be ineffective, and the light display will be abnormal

※RSW1 is the starting node when this GA module connects with the GE module; RSW2 is the final node when this GA module connects with the GE module

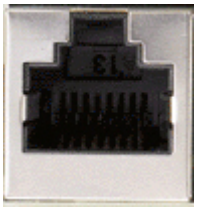

1 **8**

Figure 1.5

CN1 and CN2

Pin definitions

Pin	Label	Description
1	RS485T_1(+)	1st RS485 transmission signal (+)
2	RS485T_1(-)	1st RS485 transmission signal (-)
3	RS485T_2(+)	2nd RS485 transmission signal (+)
6	RS485T_2(-)	2nd RS485 transmission signal (-)
7	EGND	RS485 ground signal
8	EGND	RS485 ground signal

1 **2** **3**

Figure 1.6

CN3 pin definition

Pin	Label	Description
3	E24V	24V voltage input
2	GND	Power ground
1	FG	Case ground (earth)

1 2 3

Figure 1.7

CN4 pin definition

Pin	Label	Description
3	GND	Port ground
2	RS232_TX	Serial port TX port
1	RS232_RX	Serial port RX port

※ DSUB9 female port is used here (cable-side)

※ This port is used for updating the module firmware program

Special explanation: When GA01 is powered, the Error and Run lights will be displayed if the node is changed to the 1 ~ C range; the Error light will be displayed if the node is changed to 0, D; and no light will be on if the node is changed to E, F.

1.4 ASD-DMC-GE16MN

■ ASD-DMC-GE16MN Connection Diagram

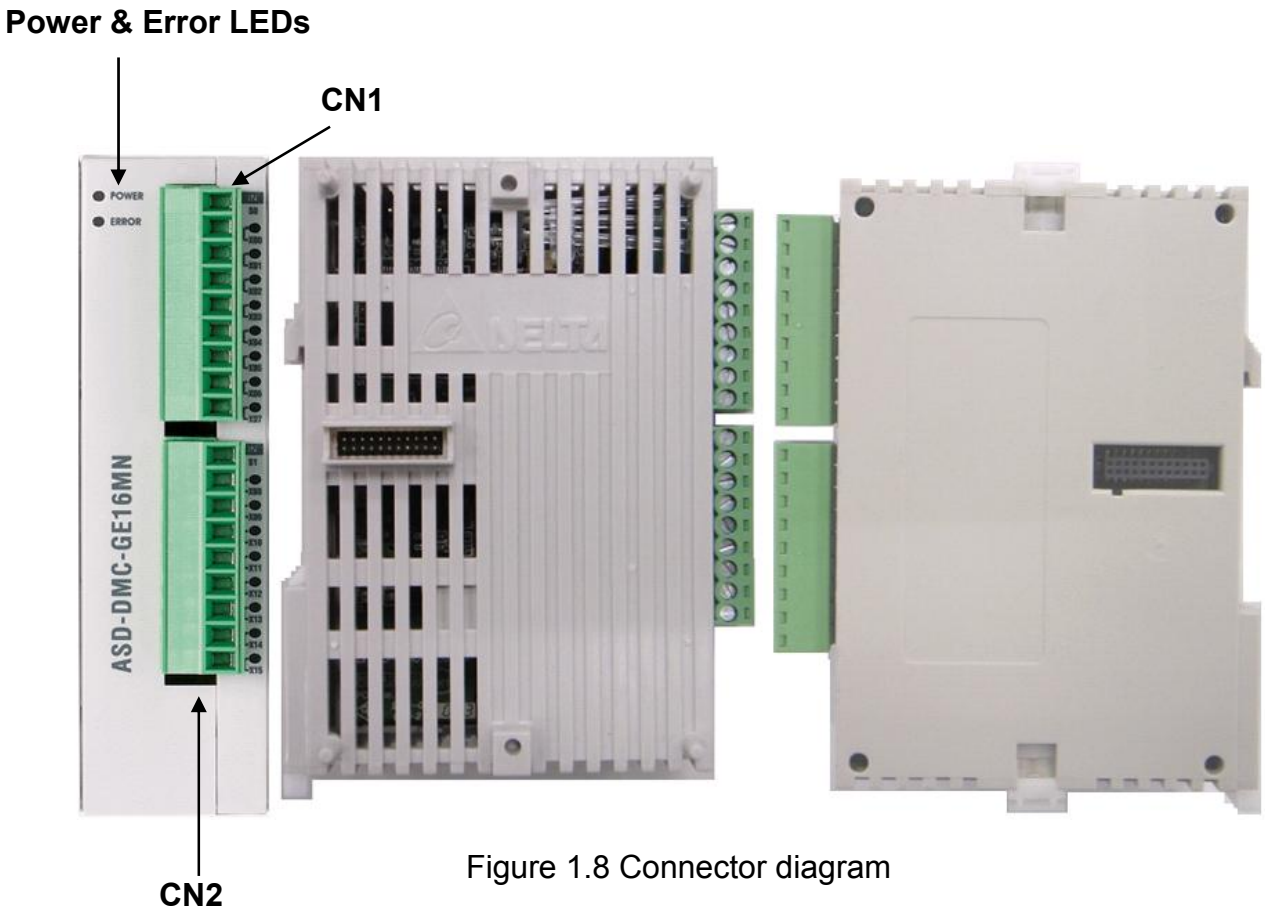

Figure 1.8 Connector diagram

■ ASD-DMC-GE16MN Module and Connectors

Figure 1.9

Power & Error LED

Label	Description
POWER	Voltage status indicator
ERROR	Error indicator

9

Figure 1.10

CN1 pin definition

Pin	Label	Description
9	S0	Port 0 common input
8	X00	GPIO 1 input
7	X01	GPIO 2 input
6	X02	GPIO 3 input
5	X03	GPIO 4 input
4	X04	GPIO 5 input
3	X05	GPIO 6 input
2	X06	GPIO 7 input
1	X07	GPIO 8 input

9

Figure 1.11

CN2 pin definition

Pin	Label	Description
9	S1	Port 1 common input
8	X08	GPIO 9 input
7	X09	GPIO 10 input
6	X10	GPIO 11 input
5	X11	GPIO 12 input
4	X12	GPIO 13 input
3	X13	GPIO 14 input
2	X14	GPIO 15 input
1	X15	GPIO 16 input

1.5 ASD-DMC-GE16NT

■ ASD-DMC-GE16NT Connection Diagram

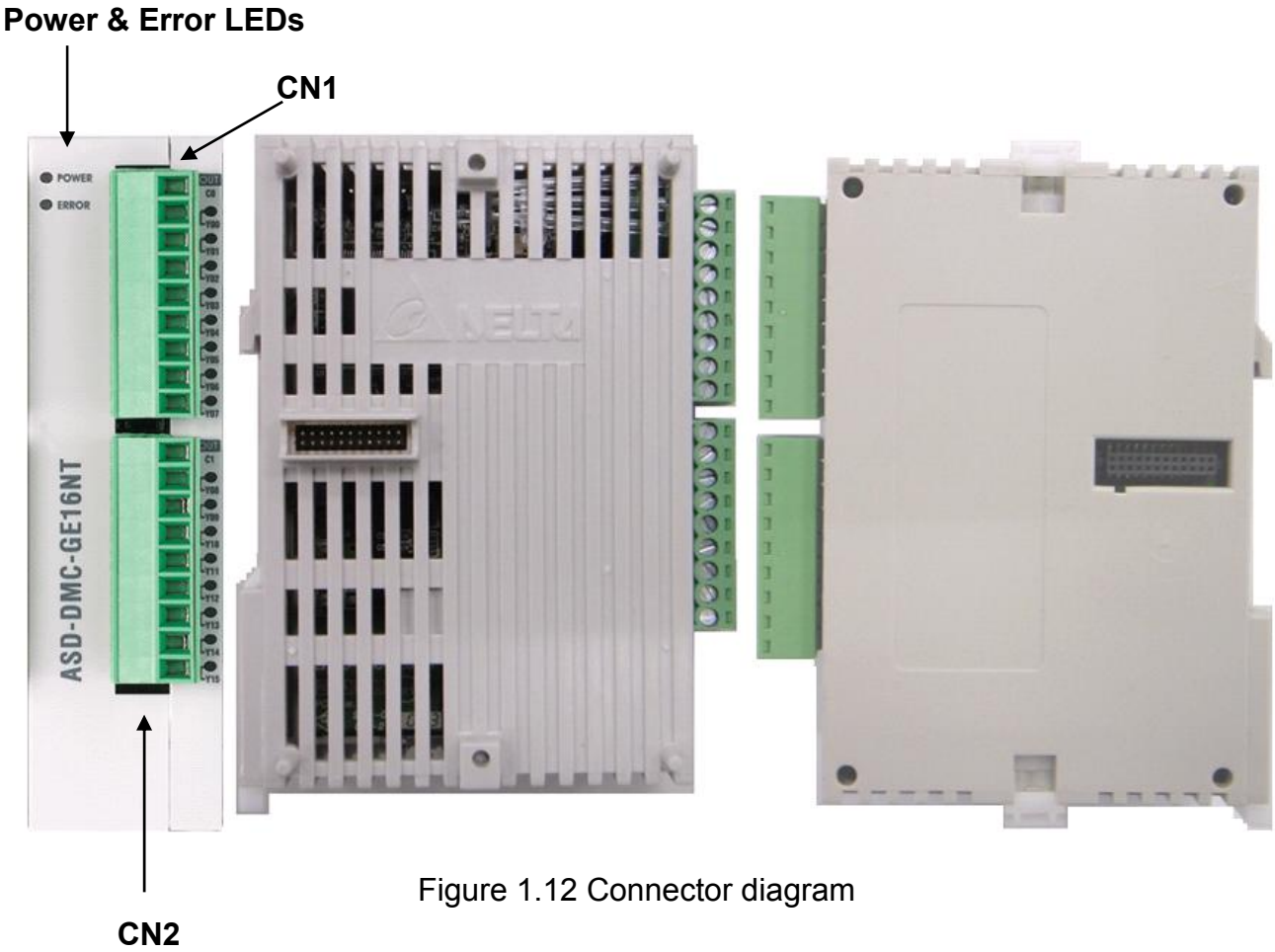

Figure 1.12 Connector diagram

■ ASD-DMC-GE16NT Module and Connectors

Figure 1.13
Power & Error LED

Label	Description
POWER	Voltage status indicator
ERROR	Error indicator

Figure 1.14
CN1 pin definition

Pin	Label	Description
9	C0	Power ground
8	Y00	GPIO 1 output
7	Y01	GPIO 2 output
6	Y02	GPIO 3 output
5	Y03	GPIO 4 output
4	Y04	GPIO 5 output
3	Y05	GPIO 6 output
2	Y06	GPIO 7 output
1	Y07	GPIO 8 output

Figure 1.15
CN2 pin definition

Pin	Label	Description
9	C1	Power ground
8	Y08	GPIO 9 output
7	Y09	GPIO 10 output
6	Y10	GPIO 11 output
5	Y11	GPIO 12 output
4	Y12	GPIO 13 output
3	Y13	GPIO 14 output
2	Y14	GPIO 15 output
1	Y15	GPIO 16 output

1.6 ASD-DMC-GE01PH

■ ASD-DMC-GE01PH Connection Diagram

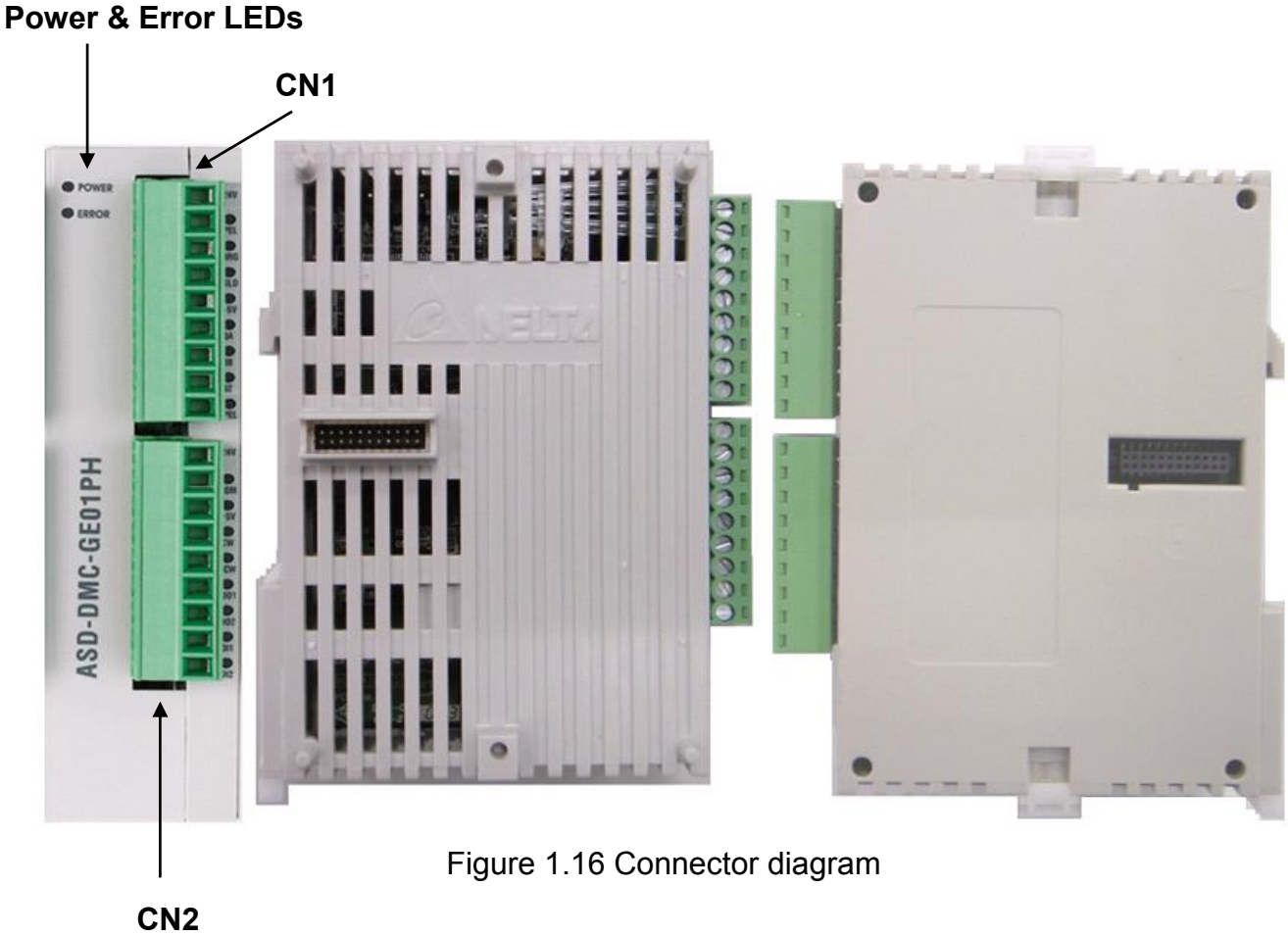

Figure 1.16 Connector diagram

■ ASD-DMC-GE01PH Module and Connectors

Figure 1.17
Power &
Error LED

Label	Description
POWER	Voltage status indicator
ERROR	Error indicator

9

Figure 1.18
CN1 pin definition

Pin	Label	Description
9	24V	24V voltage input
8	MEL	Negative limit signal input
7	PEL	Positive limit signal input
6	ORG	Origin limit signal input
5	ALM	Warning signal input
4	SVON	Servo ON signal output
3	RALM	Reset warning signal output
2	QZ+	Encoder Z phase signal input (+)
1	QZ-	Encoder Z phase signal input (-)

9

Figure 1.19
CN2 pin definition

Pin	Label	Description
9	S/S	24V Power Ground
8	QA+	Encoder A phase signal input (+)
7	QA-	Encoder A phase signal input (-)
6	QB+	Encoder B phase signal input (+)
5	QB-	Encoder B phase signal input (-)
4	CW+	Forward signal output (+)
3	CW-	Forward signal output (-)
2	CCW+	Reverse signal output (+)
1	CCW-	Reverse signal output (-)

1.7 Wiring Example

■ Wiring of GE16MN Input Point

Connection Type

Type 1: SINK (Current flows into common end)

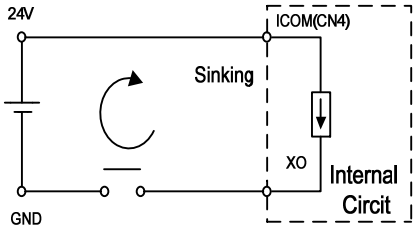

Figure 1.20

Type 2: SOURCE (current flows from common end)

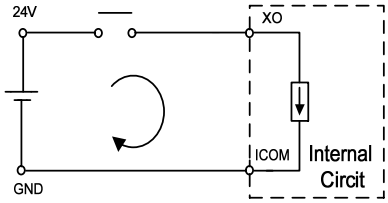

Figure 1.21

Sink Type

Equivalent circuit (digital input)

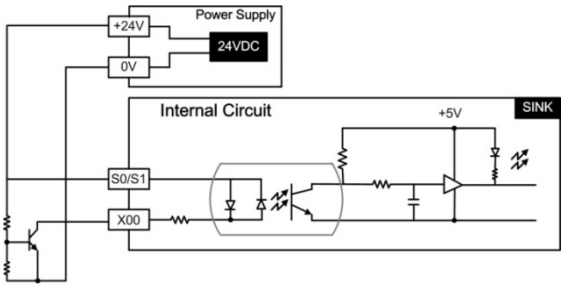

Figure 1.22

Source Type

Equivalent circuit (digital input)

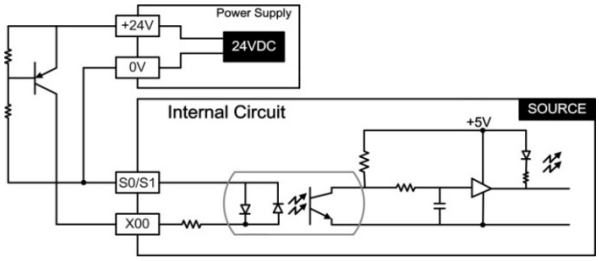

Figure 1.23

■ Wiring of GE16NT Output Point

Connection Type: Transistor T

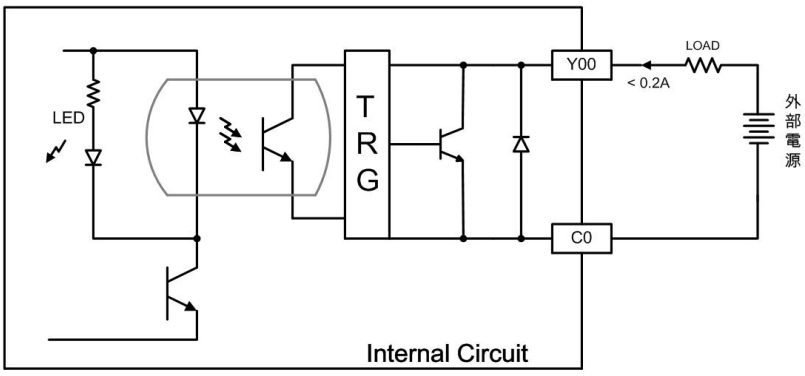

Figure 1.24

■ Wiring of GE01PH (MEL, PEL, ORG, ALM) Input Port

Connection Type: Differential

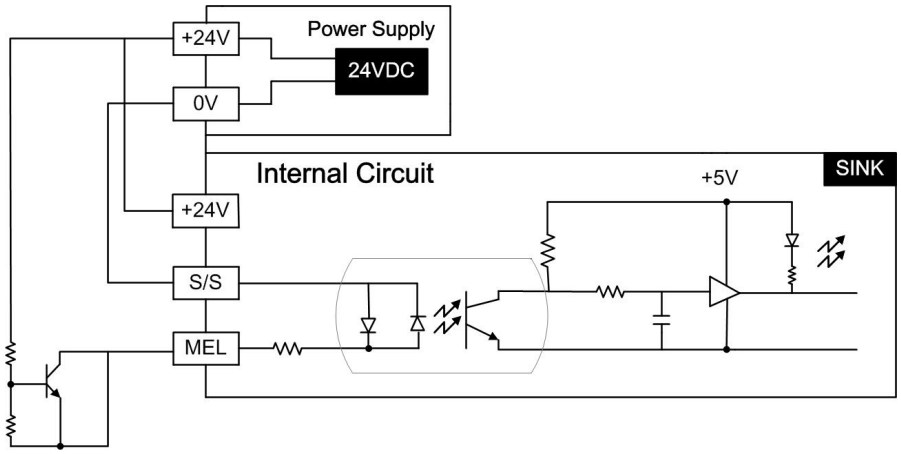

Figure 1.25

■ Wiring of GE01PH (QA+, QA-, QB+, QB-, QZ+, QZ-) Input Port

Connection Type: Differential

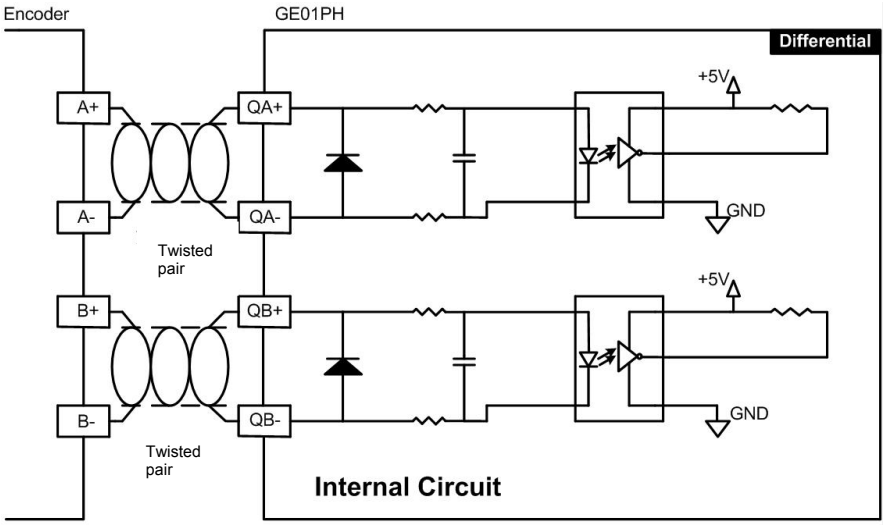

Figure 1.26

■ Wiring of GE01PH (SVON, RALM) Output Port

Output type is transistor output circuit (SINK).

Its wiring is shown below:

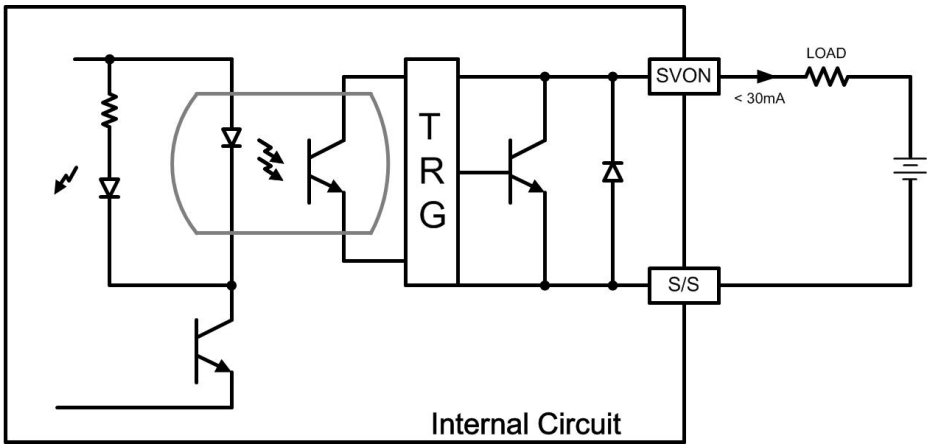

Figure 1.27

■ Wiring of GE01PH (CW+, CW-, CCW+, CCW-) Output Port

Connection Type: Differential

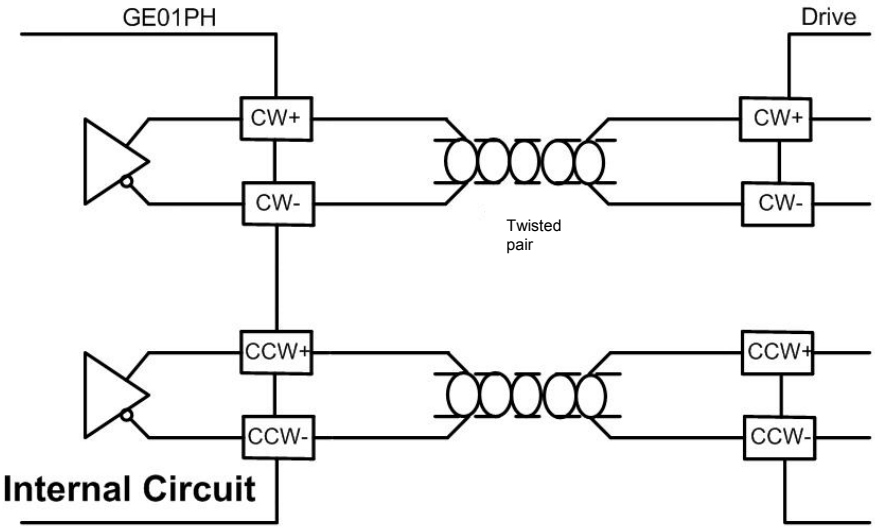

Figure 1.28

Chapter 2 Using EzDMC

2.1 Launching the Program

The connected device, gateway module and motion controller card must first be connected using CAT5e networking cables. The gateway module must also be provided with a 24VDC power supply.

Please note that to ensure that the module has a normal display, connect the COM port on DI module of the gateway (GE16MN) with 24V (i.e., connect S0 of CN1 on GE16MN with S1 of CN2); The GND port of the DO module (GE16NT) on the gateway must be connected with the power source ground (C0 of CN1 on GE16NT is connected with C1 on CN2).

Only turn on the power once you have checked that all the hardware is connected properly. Wait for the power indicators on the device and module to light up before running the program (EzDMC.exe) on the CD to control the module.

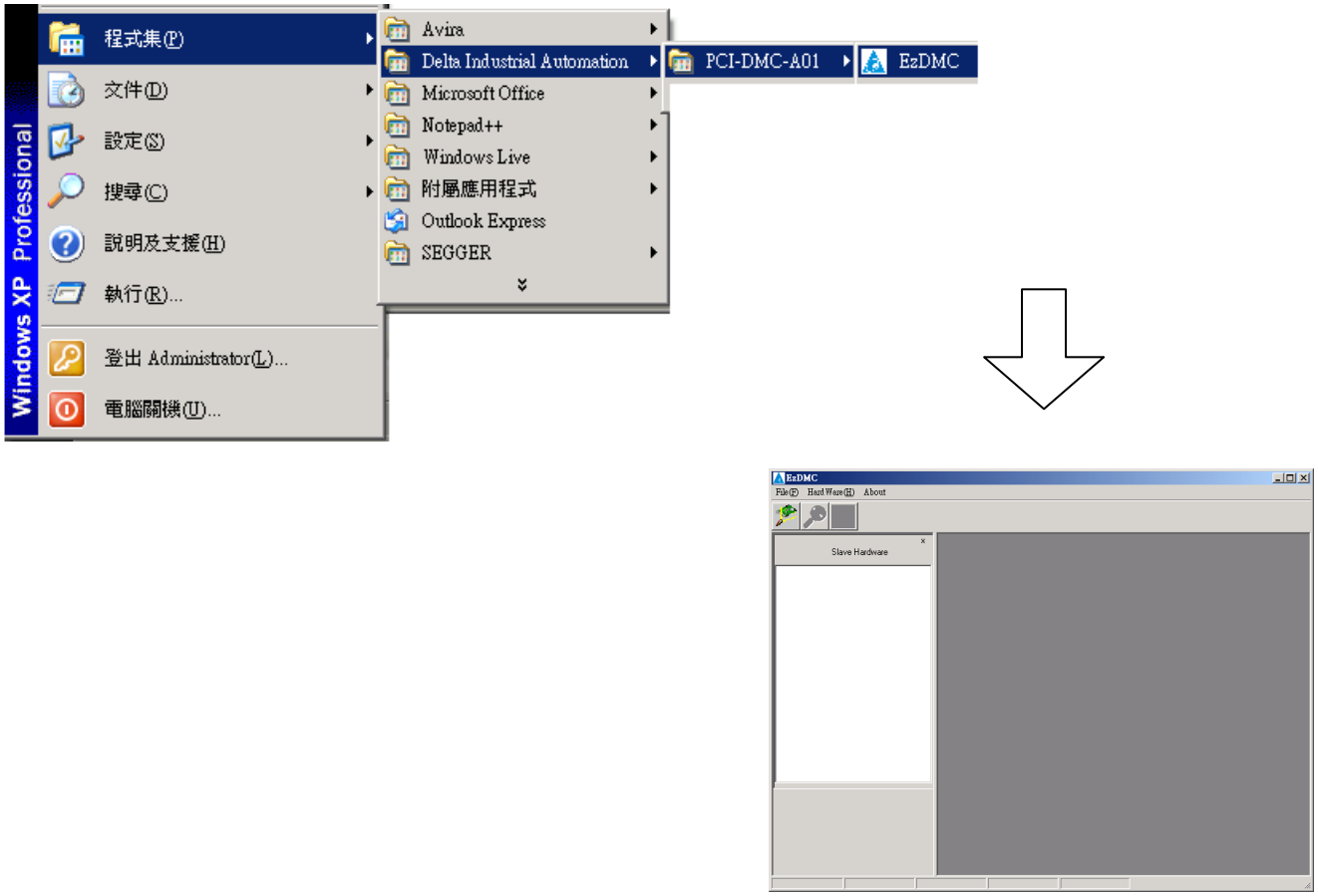

Figure 2.1 Launching EzDMC program

2.2 Connecting to Gateway Module

After launching the EzDMC program, click on "Search Card" button. When the program has found the PCI-DMC-A01/PCI-DMC-B01 interface on the system, select the icon for the card, and then click on "Scan Slave" (①) button to find the connected Gateway module. (For a more detailed description of the EzDMC program interface and operating instructions, please refer to the "PCI-DMC-A01/PCI-DMC-B01 User Guide").

EzDMC will generate a module list (②) as shown in the following diagram when it finds a connected module. Clicking on a module will call up that module's operating interface; please refer to the following section for an explanation of how to use a module's operating interface.

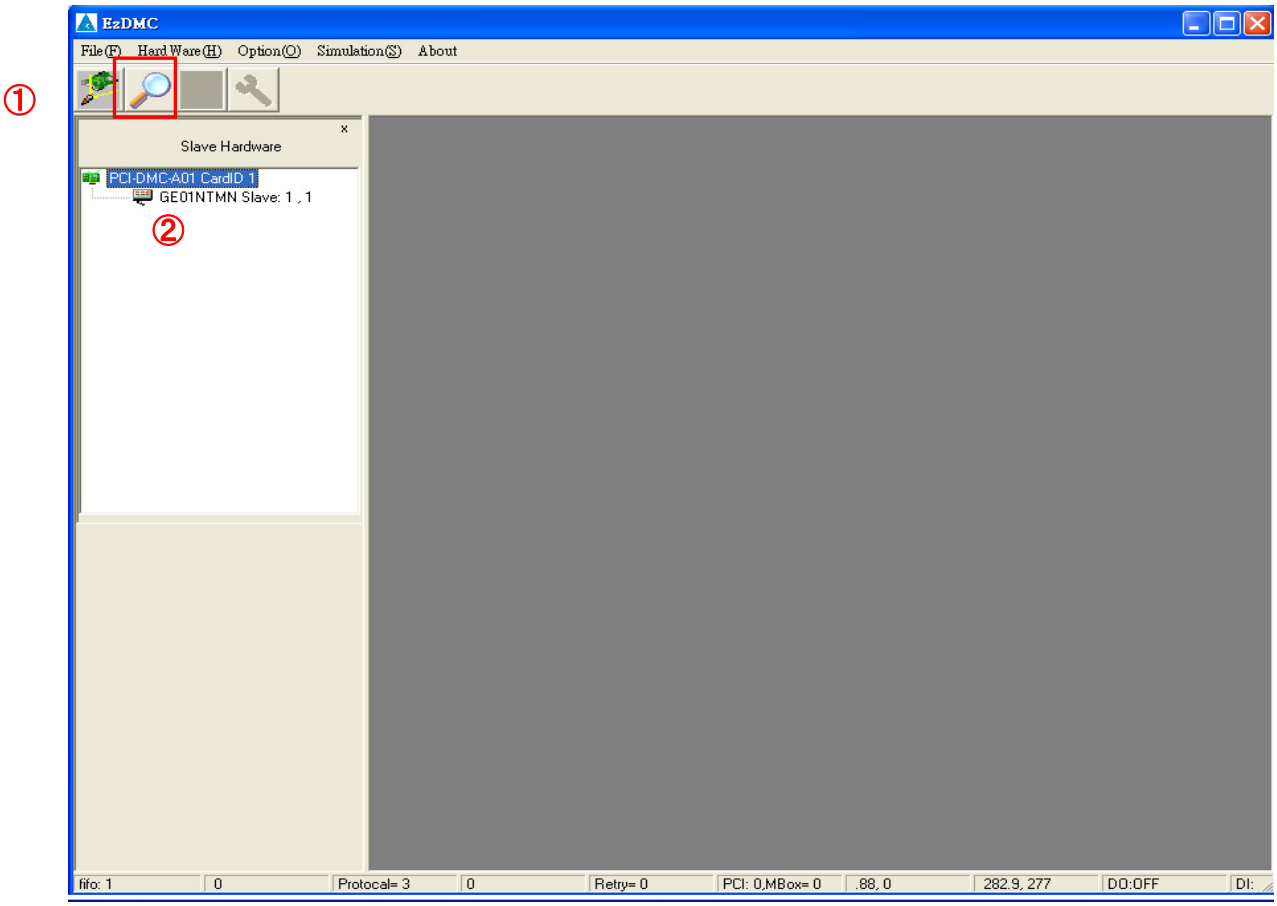

Figure 2.2 Finding a connected gateway module
(ASD-DMC-GE16MN/ASD-DMC-GE16NT)

2.3 Gateway Module Interface

2.3.1 ASD-DMC-GE16MN / ASD-DMC-GE16NT

When you connect to ASD-DMC-GE module, you must set RSW1 and RSW2 on ASD-DMC-GA01 as the starting node and final node. The starting node can identify the assigned node in accordance with your front-end slave, and the final node can use the EzDMC spreadsheet tool to help you assign the correct node. First click on [GE Node Calc] (①) in [Simulation] option. Entering the number of modules and set the starting node in the window that appears, then press the “End NodeID” key. The number of the node (②) assigned to the final node will be displayed.

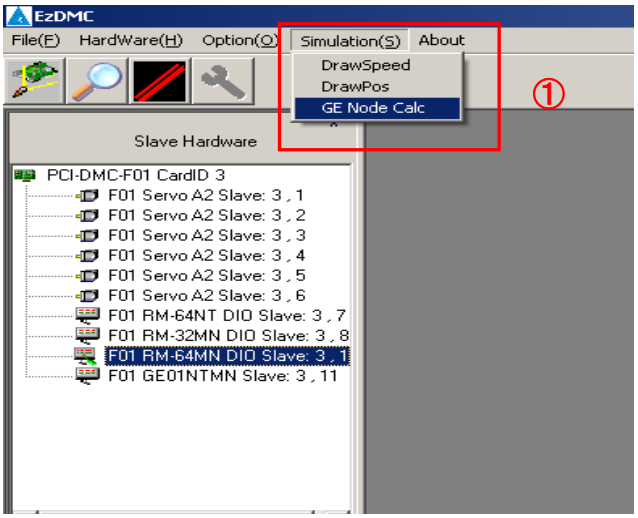

Figure 2.3 Displaying the GA/GE node calculation screen

① Click on Simulation → GE Node Calc in Figure 2.1; the screen shown in Figure 2.2 will appear.

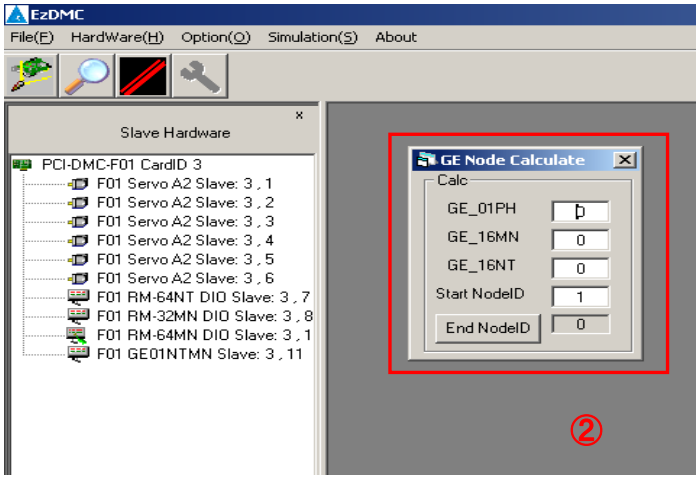

Figure 2.4 Displaying the GA/GE node calculation screen

② Input the starting node and the number of modules that are connected, and press “END NodeID” to calculate the final node.

In EzDMC, the four ASD-DMC-GE16MN and four ASD-DMC-GE16NT constitute a slave IO operating interface. When there are more modules than those specified above, EzDMC will automatically shift them to the next slave IO operating interface.

The following is an explanation of this interface:

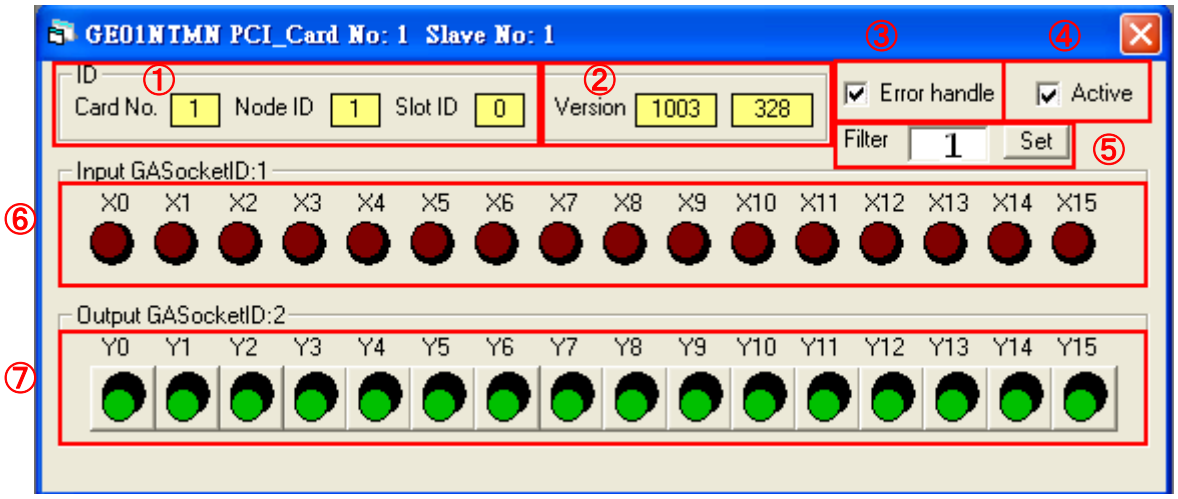

Figure 2.5 GE16MN/GE16NT digital input / output signal display

① GE16MN/GE16NT module information (In this example, the module is Node 1 connected to Card 1)

② GE16MN/GE16NT module firmware version.

③ Error handling option: This determines whether the IO setup is preserved after power is turned off. (Check to keep record).

④ Active option: This determines the connected device receiving the output signal.

⑤ GE16MN module's software filter. (In this example it is set to 1ms)

⑥ GE16MN module's input signal display.

⑦ Shows each bit (Y00 ~ Y15) of the GE16NT module's output signal.

2.3.2 ASD-DMC-GE01PH

Single-Axis Operating Interface

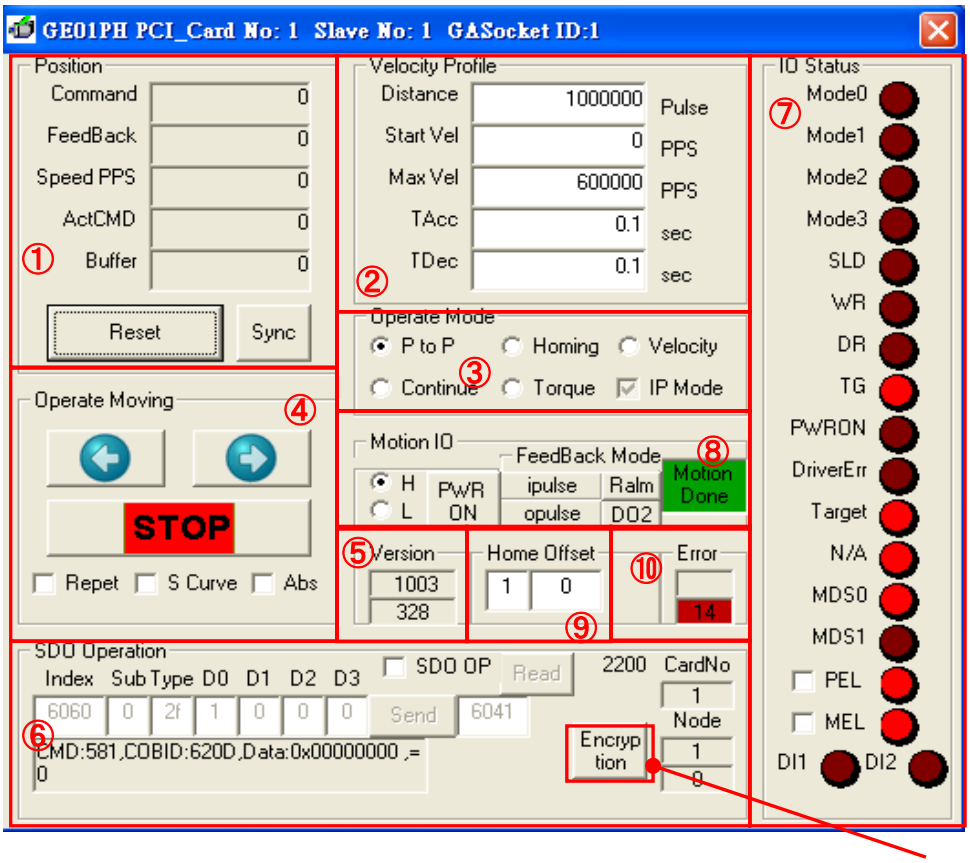

Figure 2.6 GE01PH single-axis operating interface

① Display the counter values of motion, including position, velocity, torque, number of buffer commands, position clear and sync motion (values of Command and Feedback shall be the same).

② Set the motion command. This includes motion distance, starting velocity, maximum velocity and acceleration/deceleration time.

③ Select the operate mode for motion.

④ Execute motion commands such as clockwise rotation, CCW rotation and stop. (includes S-curve, reference coordinates selection, and repeat option)

⑤ Firmware version of connected GE01PH.

⑥ Set CANOpen command. User can control the module by using this to read/send CANOpen commands.

⑦ Displays the status indicators of the IO port for that axis on GE01PH.

⑧ Set the excite, reset alarm and motion status functions for that axis.

⑨ Set the Homing mode and offset value.

⑩ Display error indicator. (See following table)

⑪ Open Slave Encryption interface. (reserved; function currently not supported)

Indicator	Description	How to clear the indicator	Indicator	Description	How to clear the indicator
0	Normal	None (Indicator does not come ON)	15	Collision with machine positive limit	Move away from positive limit
9	Velocity limit exceeded	Reset the velocity	283	Collision with software positive limit	Move away from software positive limit
13	EMG	Press the "RALM" button	285	Collision with software negative limit	Move away from software negative limit
14	Collision with machine negative limit	Move away from negative limit	299	Invalid operation	Press the "RALM" button

When the gateway module has two or more GE01PH modules, the "Multi Axis Control" key in EzDMC interface can be used. Clicking on this key will switch from a single-axis control interface to a multi-axis control interface, as shown below. Please refer to the sections below for an explanation of the multi-axis control interface.

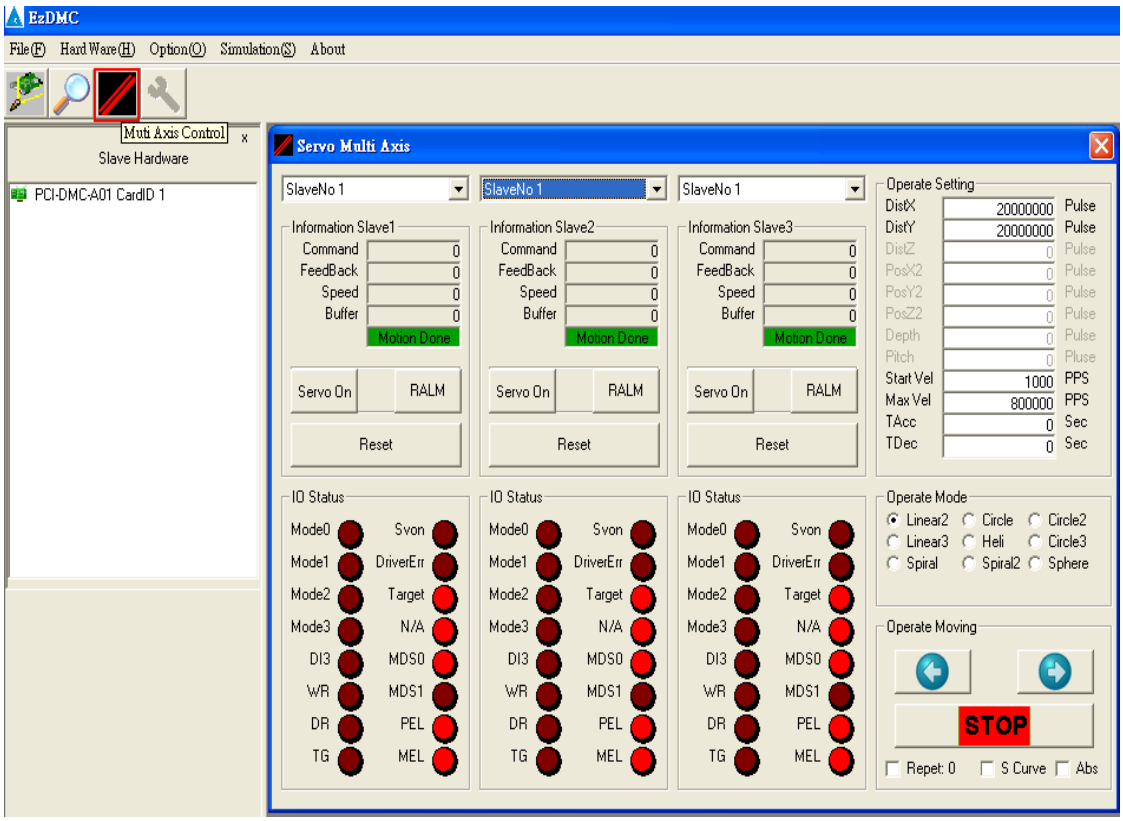

Figure 2.7 Switching from a single axis control interface to the multi-axis control interface

Multi-axis Control Interface (Up to 3 axes can currently be controlled simultaneously)

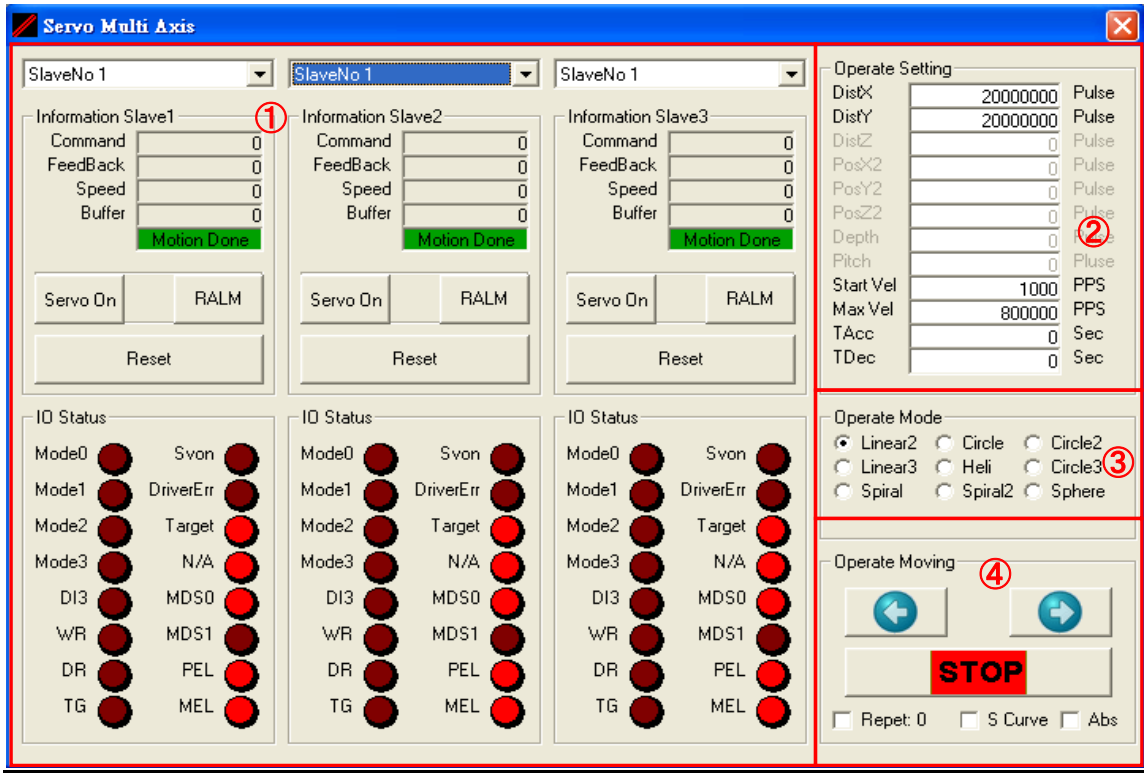

Figure 2.8 GE01PH control interface

① Select the operating axis, displays counter values of motion, including excite function, position clear and the status indicators for that axis' IO port.

② Motion displacement parameter settings. (The selection mode in Block ③will change the parameters displayed)

③ Select the operate mode for motion.

④ Execute motion commands such as clockwise rotation, CCW rotation and stop. (including S-curve, reference coordinates selection, repeated implementation selection)

Checking "Repeat" will implement continuous forward and backward depending on the Distance value.

Checking "S Curve" will use the S-curve during acceleration/deceleration. The T Curve velocity cross-section is used otherwise.

Checking "Abs" means to use absolute coordinates. Relative coordinates will be used otherwise.

(This page is intentionally left blank.)